APPENDIX- A1:

”FABRICATION, INSTALLATION AND COMMISSIONING OF TEST FACILITY FOR BRIDGE EXPANSION JOINTS AT CSIR - CRRI, NEW DELHI:

PACKAGE-3:

INSTRUMENTATION AND CONTROL SYSTEM FOR THREE TEST RIGS OF BRIDGE EXPANSION JOINT TESTING FACILITY”

SERVOVALVES

DIRECT-OPERATED WITH INTEGRATED DIGITAL ELECTRONICS AND FIELDBUS INTERFACE

SERIES D636 AND D637 / SIZES 03 AND 05

Rev. 2, March 2010

OFFERING FLEXIBLE INTEGRATION AND ADVANCED MAINTENANCE FEATURES INCLUDING DIAGNOSTICS, MONITORING OF CHARACTERISTICS AND ABILITY TO DEFINE DYNAMIC BEHAVIORS

WHAT MOVES YOUR WORLD

MOOG

Whenever the highest levels of motion control performance and design flexibility are required, you'll find Moog expertise at work. Through collaboration, creativity and world-class technological solutions, we help you overcome your toughest engineering obstacles. Enhance your product's performance. And help take your thinking further than you ever thought possible.

D636 and D637

Product Overview 3

Features and Benefits 4

Descriptions of Operation 5

Electronics 7

Data Communication 11

Communication Software 12

D636

Technical Data 13

Accessories 20

D637

Technical Data 21

Accessories 27

D636 and D637

Accessories 28

Moog Global Support 29

Ordering Information 30

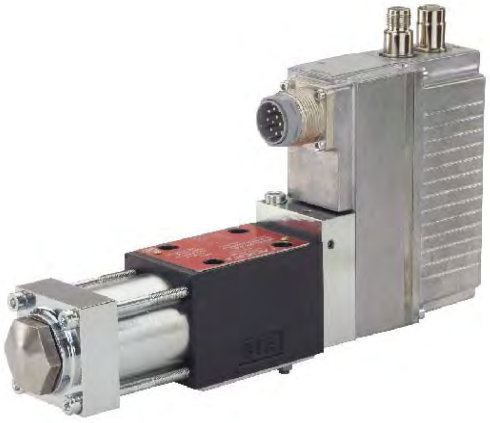

This catalog is for users with technical knowledge. To ensure all necessary characteristics for function and safety of the system, the user has to check the suitability of the products described herein. The products described in this document are subject to change without notice. In case of doubt please contact Moog.

Moog is a registered trademark of Moog Inc. and its subsidiaries. All trademarks as indicated herein are the property of Moog Inc. and its subsidiaries. For the full disclaimer refer to www.moog.com/literature/disclaimers.

For the most current information, visit www.moog.com/industrial or contact your local Moog office.

Excellence in motion control technology

For over 55 years Moog has ranked amongst the leading providers of motion control technology providing high performance products. Moog offers worldclass products using state of the art control techniques that contribute to the performance improvement of machines.

Moog Servovalves and Servo-Proportional Valves

Moog has been producing Servovalves and Servo-Proportional Valves with integrated electronics for over 30 years. Our valves are used in all kinds of machine applications.

Direct drive servovalves

The D636 and D637 Series Valves, sizes 03 and 05 are Direct Drive Servovalves with flow control.

The valves are throttle control valves for 4-(2-, 3-, 2x2-) way applications and are suitable for electrohydraulic control of position, speed, pressure and force even under high dynamic requirements.

Design and application

A permanent magnet linear force motor is used to drive the spool. In contrast to proportional solenoid drives, the linear force motor drives the spool in both working directions from the spring-centered middle position. The strong actuating force of the spool, provides Moog Servovalves with excellent static and dynamic characteristics.

Digital electronics

The digital driver and control electronics are integrated in the valve. The valve electronics contain a microprocessor system which executes all the important functions via the valve software it contains. The digital electronics enables the valve to be controlled across the full range of operation, with significantly reduced influence from temperature and drift.

Fieldbus interface

A built-in fieldbus interface (e.g. CANopen®, Profibus-DP® or EtherCAT®) enables operating parameters to be set, activates the valve and monitors its performance. To reduce wiring, the fieldbus interface is provided with two connectors. Thus, valves may be integrated into the bus without any external T-joints. In addition, up to two analog input commands and up to two analog actual value outputs are available.

Optionally, the valves are available without a fieldbus interface. In this case, the valve is controlled using analog inputs. Valve parameters are set using the integrated M8 service connector.

Axis control

In addition, axis control functionality such as position control, velocity control and force control can be added to the valves. The control mode can be switched over from one to the other by defined events.

Our application engineers can assist you with any additional information you may require.

Benefits of Direct Drive Servovalves with integrated digital electronics

- Fieldbus data transfer: Electrically isolated fieldbus interface
- Diagnostic capabilities: Integrated monitoring of important ambient and internal data. Valve parameters can be changed on site or remotely
- Flexibility: Since parameters may be downloaded using the fieldbus or a high level PLC program, valve parameters may be tuned during a machine cycle while the machine is operating
- Direct drive with permanent magnet linear force motor that provides high actuating force, works in 2 directions
- Pilot oil not required
- Pressure-independent dynamic response
- Low hysteresis and high response characteristics
- Low power demand at and in the proximity of hydraulic zero. Hydraulic zero is the spool position at which the pressures of a symmetrical spool are equal in both blocked control ports
- If the electrical supply fails, a cable breaks or emergency stop is activated, the spool returns to the predefined spring-centered position without passing a fully open control port position (fail-safe) increasing safety

D636 Series single-stage drive servovalve

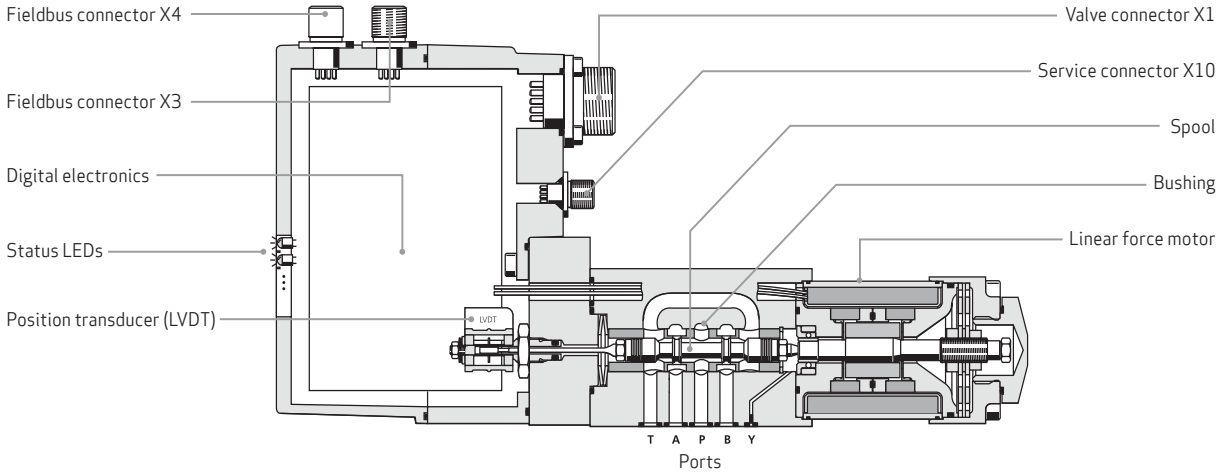

Description of operation of the permanent magnet linear force motor

The linear force motor is a permanent magnet excited differential motor.

Some of the magnetic force is already provided by the permanent magnets. The linear force motor's power demand is thus significantly lower than the comparable proportional solenoid.

The linear force motor drives the servovalve's spool. The spool starting position is determined in the de-energized state by the centering springs. The linear force motor enables the spool to be deflected from the starting position in both directions. The actuating force of the linear force motor is proportional to the coil current.

The high forces of the linear force motor and centering springs effect precise spool movement even against flow and frictional forces.

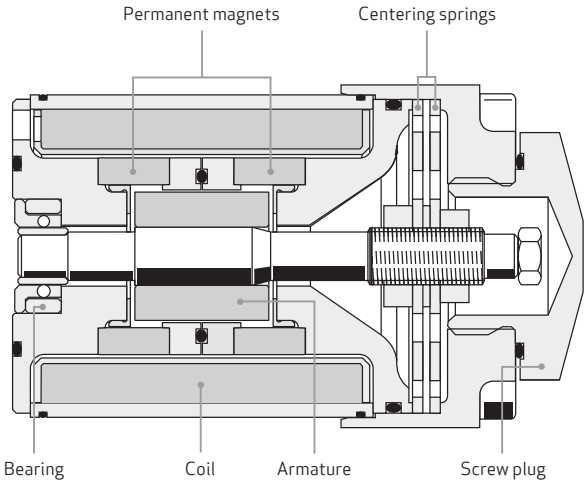

4-way and 3-way operation

In 4-way operation the servovalves can be used to control the flow in ports A and B (used as throttle valves). Port A or B must be closed in order to obtain 3-way operation.

Leakage port Y must be used if the pressure in tank port T exceeds a value of 50 bar (725 psi). The valves are available with zero lap, less than 3 % or 10 % positive overlap.

4-way operation with fail-safe function [1)]

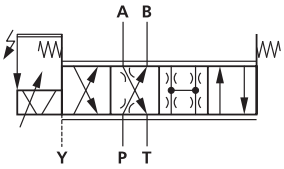

3-way operation with fail-safe function [1)]

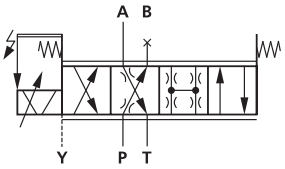

2-way and 2x2-way operation

In 2-way and 2x2-way operation the control valves can be used to control the flow in one direction (used as throttle valves).

In 2x2-way operation the valve can be used in 2-way applications for higher flows. It is necessary to connect ports P with B and A with T externally for this purpose.

2-way operation [1)]

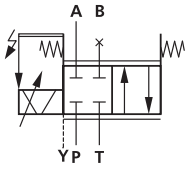

2x2-way operation [1)]

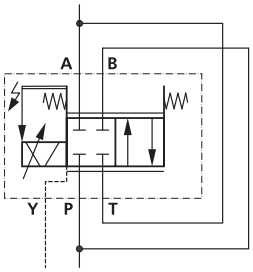

[1)] Hydraulic symbol D636

Servovalve operational mode

The D636 and D637 Series Valves are valves with flow control. In this operating mode the position of the spool is controlled. The command signal corresponds to a particular spool position.

The command signal (spool position command) is transmitted to the valve electronics. The actual spool position is measured with a position transducer (LVDT) and transmitted to the valve electronics. The electronics compares the actual spool position and command signal and generates a signal to drive the linear force motor, which moves the spool into the corresponding position.

The position command can be modified by parameters in the valve software (e.g. linearization, ramping, dead band, sectionally defined amplification, etc.).

Flow calculation

The actual valve flow is dependent on the spool and the pressure drop Δp across the spool lands.

At 100 % command signal the valve flow at rated pressure drop Δp_N = 35 bar (500 psi) per metering land is the rated flow Q_N. For other than rated pressure drop, the valve flow changes at a constant signal according to the following formula.

$$Q = Q_N \cdot \sqrt{\frac{\Delta p}{\Delta p_N}}$$

Q	[l/min (gpm)]	= actual flow
Q_N	[l/min (gpm)]	= rated flow
Δp	[bar (psi)]	= actual valve pressure drop
Δp_N	[bar (psi)]	= rated valve pressure drop

The actual flow Q must not exceed a mean flow velocity of 30 m/s (96.54 ft/s) at ports P, A, B and T.

FLOW DIAGRAM

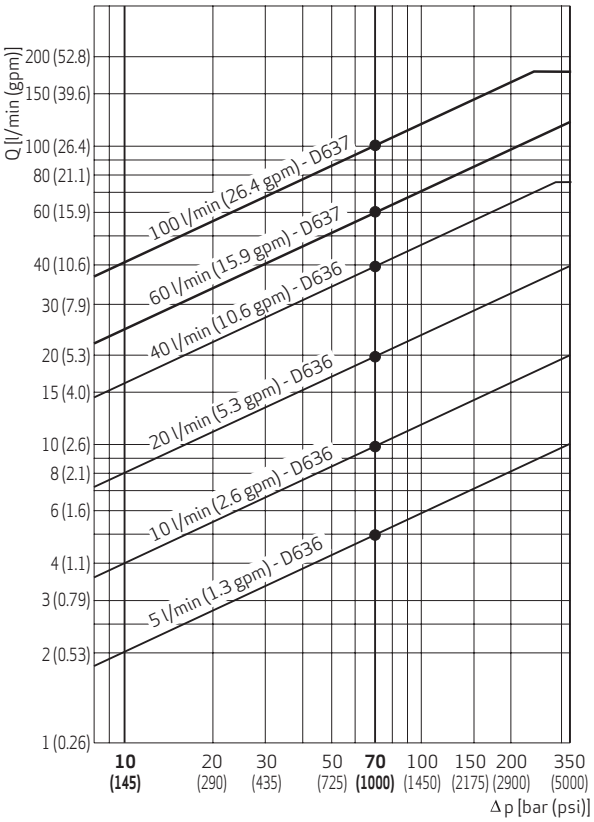

Signal and pin assignment for valves with analog interfaces 6-pole + PE (11-pole + PE)

Command signal ±10 V, floating

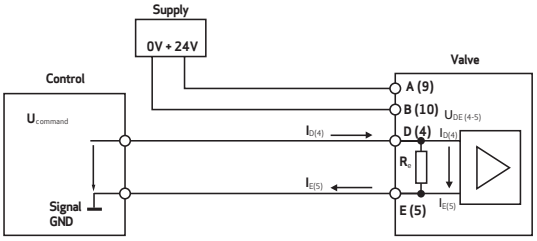

Command signal ±10 mA, floating

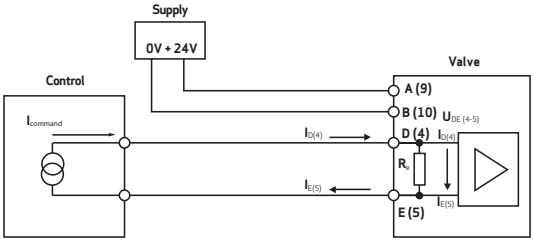

Command signal 4 to20 mA, floating

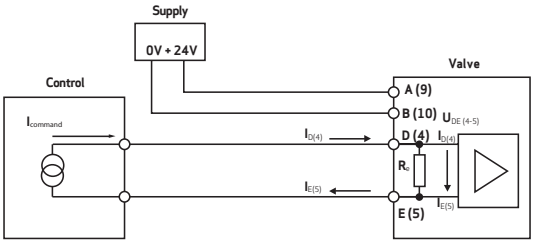

Actual value $I_{outF(6)}$ (spool position)

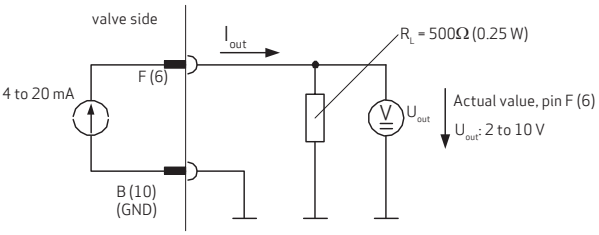

The letters without parentheses denote the pins on the 6-pole + PE connector, the numbers in parentheses denote the pins on the 11-pole + PE connector.
For further information, see also Moog Technical Notes TN353 and TN494.

Order code	Command signal ±100 % spool stroke	Actual value ±100 % spool stroke	Command signal polarity		Actual value polarity		Hydraulic
			6-pole + PE	11-pole + PE	6-pole + PE	11-pole + PE	
E	4 to 20 mA	4 to 20 mA	$I_D = -I_E = 20$ mA	$I_4 = -I_5 = 20$ mA	$I_F = -I_B = 20$ mA	$I_6 = -I_2 = 20$ mA	P→A and B→T
M	±10 V	4 to 20 mA	$U_D - U_E = 10$ V	$U_4 - U_5 = 10$ V	$I_F = -I_B = 20$ mA	$I_6 = -I_2 = 20$ mA	P→A and B→T
X	±10 mA	4 to 20 mA	$I_D = -I_E = 10$ mA	$I_4 = -I_5 = 10$ mA	$I_F = -I_B = 20$ mA	$I_6 = -I_2 = 20$ mA	P→A and B→T

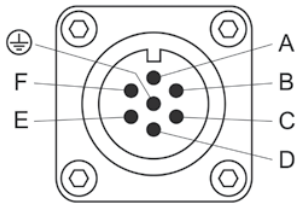

Pin assignment for valves with 6-pole + PE connector (X1)

Pin assignment as per EN 175201-804, mating connector (type R or S, metal) with preleading earth pin (⏚).

Pin	Pin assignment	Voltage, floating ±10 V	Current, floating ±10 mA, 4 to 20 mA [1]
A	Supply voltage	24 V DC (18 to 32 V DC) referred to GND (polarized against GND)	
B	GND	Supply ground / signal ground	
C	Enable input	> 8.5 to 32 V DC referred to GND: valve ready for operation (enabled) < 6.5 V DC referred to GND: valve not ready for operation (disabled) The input resistance is 10 kΩ.	
D E	Command signal, difference amplifier input [2]	$U_{in} = U_{D-E}$ $R_{in} = 20\ k\Omega$	$I_{in} = I_D = -I_E$ $R_{in} = 200\ \Omega$ $I_{max} = \pm 25$ mA
F	Actual value output	I_{out}: 4 to 20 mA referred to GND (I_{out} is proportional to the spool position. 12 mA corresponds to the valve center position.)	
⏚	Protective earth (PE)	Connected with valve body	

[1] Command signals I_{in} < 3 mA (e.g. due to an open circuit) indicate a fault in the 4 to 20 mA signal range. The valve response to this fault can be configured and activated by the customer.

[2] The potential difference (referred to GND) must be between -15 V and +32 V.

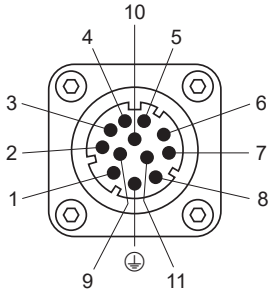

Pin assignment for valves with 11-pole + PE connector (X1)

Pin assignment as per EN 175201-804, mating connector (metal) with preleading protective earth pin (⏚).

Pin	Pin assignment	Voltage, floating ±10 V	Current, floating ±10 mA, 4 to 20 mA[1]
1	Not assigned		
2			
3	Enable input	> 8.5 to 32 V DC referred to GND: valve ready for operation (enabled) < 6.5 V DC referred to GND: valve not ready for operation (disabled) The input resistance is 10 kΩ.	
4	Command input, difference amplifier input [2]	$U_{in} = U_{4-5}$ $R_{in} = 20\ k\Omega$	$I_{in} = I_4 = -I_5$ $R_{in} = 200\ \Omega$ $I_{max} = \pm 25$ mA
5			
6	Actual value output	I_{out} = 4 to 20 mA referred to GND. $R_L = 500\ \Omega$ (I_{out} is proportional to the spool position. 12 mA corresponds to the valve center position.)	
7	Not assigned		
8	Digital output, valve status	ON: enable & supply OK. Valve is ready for operation. Nominal load voltage: 24 VDC, Load type: ohmic, inductive, lamp load Output current maximum 1.5 A (short-circuit-proof) [3]	
9	Supply voltage	24 V DC (18 to 32 V DC) referred to GND (polarized against GND)	
10	GND	Supply ground / signal ground	
11	Digital output	OFF: indicates fault [4] Nominal load voltage: 24 VDC, Load type: ohmic, inductive, lamp load Output current maximum 1.5 A (short-circuit-proof) [3]	
⏚	Protective earth (PE)	Connected with valve body	

[1] Command signals Iin < 3 mA (e.g. due to an open circuit) indicate a fault in the 4 to 20 mA signal range. The valve response to this fault can be configured and activated by the customer.

[2] The potential difference (referred to GND) must be between -15 V and +32 V.

[3] The sum total of the currents drawn at the outputs pin 8 & pin 11 (measured to GND) must be added to the valve supply current. The valve fuse must be configured for the total current.

[4] Output can be programmed at the factory, "OFF" signal indicates fault (e.g. command signal/actual value deviation).

CANopen® connectors (X3, X4)

- Coding A
- Thread M12x1
- 5-pole

Pin	Signal X3, X4	Description
1	CAN_SHLD	Shield
2	CAN_V+	Not connected in the valve
3	CAN_GND	Ground
4	CAN_H	Transceiver H
5	CAN_L	Transceiver L

External thread, pin contacts

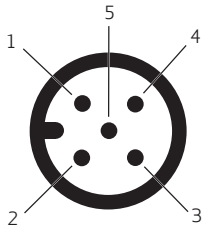

View on CAN connector X3

Internal thread, socket contacts

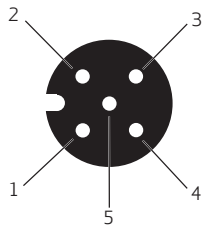

View on CAN connector X4

Profibus-DP® connectors (X3, X4)

- Coding B
- Thread M12x1
- 5-pole

Pin	Signal X3, X4	Description
1	Profi V+	Supply voltage 5 V of terminal resistors
2	Profi A	Receive/transmit data –
3	Profi GND	Ground
4	Profi B	Receive/transmit data +
5	Shield	Shield

External thread, pin contacts

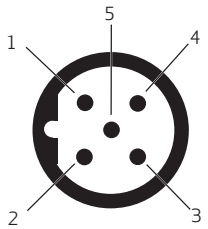

View on Profibus-DP connector X3

Internal thread, socket contacts

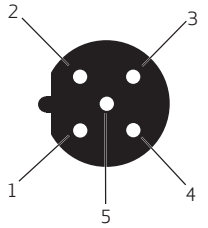

View on Profibus-DP connector X4

EtherCAT® IN & OUT connectors (X3, X4)

- Coding D
- Thread M12x1
- 4-pole

Pin	Signal X4 IN	Signal X3 OUT	Description
1	TX + IN	TX + OUT	Transmit
2	RX + IN	RX + OUT	Receive
3	TX – IN	TX – OUT	Transmit
4	RX – IN	RX – OUT	Receive

Internal thread, socket contacts

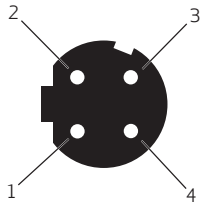

View on EtherCAT connector X3

Internal thread, socket contacts

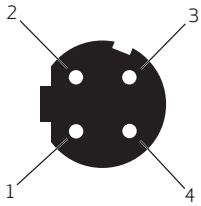

View on EtherCAT connector X4

General Information

Modern automation technology is characterized by an increasing decentralization of processing functions via serial data communication systems. The use of serial bus systems in place of conventional connection technologies guarantees greater system flexibility with regard to alterations and expansions. It additionally opens up considerable potential for saving project planning and installation costs in many areas of industrial automation. Further possibilities of parameterization, better diagnostic options and a reduction of the variety of variants are advantages which have only been made possible by the use of fieldbuses.

VDMA profile

In one working group within the VDMA (German Machinery and Plant Manufacturers' Association), a profile was created in collaboration with numerous well-known hydraulic system manufacturers. This profile describes communication between hydraulic components via a fieldbus. It defines uniform functions and parameters in a standardized exchange format.

CANopen®

In accordance with EN 50325-4. The CAN bus was originally developed for use in automobiles, but has also been used for years in various fields of machine construction. The CAN bus is designed above all for transmission reliability and speed.

The CAN bus has the following features:

- Multi-master system:
  Each node can transmit and receive
- Topology:
  Line structure with short stub lines
- Network extension and band widths:
  25 m (80.4 ft) at 1 Mbit/s to 5000 m (16090 ft) at 25 kbit/s
- Addressing type:
  Message-orientated via identifiers. Priority assignment of the message via identifier
- Security:
  Hamming distance = 6, i.e. up to 6 individual errors per message are detected
- Bus physics:
  ISO 11989
- Maximum number of nodes: 127

Profibus-DP®

In accordance with EN 61158. Profibus-DP® was developed for the process and manufacturing industries and is thereby supported by numerous control system manufacturers.

The Profibus-DP® has the following features:

- Multi-master system:
  Several masters share access time and initiate communication. Slaves react only on request
- Topology:
  Linear structure with short stub lines
- Network expansion and transmission rates:
  100 m (321.8) at 12 Mbit/s to 1200 m (3861.6 ft) at 9.6 kbit/s per segment. Use of repeaters possible
- Addressing type:
  Address-orientated. Priority/cycle time assignment of messages via master configuration
- Bus physics:
  RS-485 in accordance with EIA-485
- Maximum number of nodes:
  126

EtherCAT®

In accordance with IEC/PAS 62407. EtherCAT® has been developed as an industry bus based on Ethernet to meet increasing demands regarding cycle time. The EtherCAT® bus is designed for high data transmission rates and fast cycle times.

The EtherCAT® bus has the following features:

- Single-master system:
  Master initiates communication. Slaves react only on request
- Topology:
  Line, star, tree and ring structure based on the daisy chain principle
- Network expansion and transmission rates:
  100 m (321.8 ft) between two nodes, 100 Mbit/s
- Addressing type:
  Address-orientated, one datagram for all nodes
- Bus physics:
  Fast Ethernet 100 Base Tx
- Maximum number of nodes:
  65535

General information

The Windows®-based "Moog Valve Configuration Software" developed by Moog enables fast and convenient commissioning, diagnostics and configuration of the valve. Data may be uploaded from the PC to the valve and; current settings may be downloaded from the valve to the PC and displayed. The valve can be controlled by means of graphic control elements. Status information, command signals, actual values and characteristic curves are represented in graphical form. System parameters can be recorded and visualized by means of an integrated oscilloscope / data logger.

Note

Configuration/starting-up with the "Moog Valve Configuration Software" can be performed on valves with a CANopen® interface via the fieldbus connectors, otherwise (valves with Profibus-DP® or EtherCAT® interface or purely analog activation) via the integrated M8 service connector. It is not permitted to operate the "Moog Valve Configuration Software" on a fieldbus while the bus is communicating.

The software is available from Moog upon request.

Configuration software

System requirements:
The configuration software can be installed on a PC with the following minimal requirements:

- IBM PC-compatible with 133 MHz
- Windows® 95/98/ME, Windows® NT/2000/XP/Vista
- 64 MB RAM
- 40 MB free hard disk space
- Monitor 640x480 pixel resolution
- Keyboard, mouse

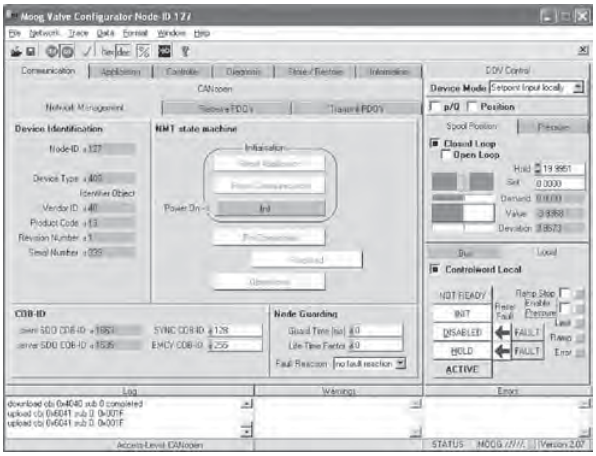

Recommended requirements:

- IBM PC-compatible with 300 MHz
- Windows® NT/2000/XP/Vista

The following equipment is also required to be able to use the software (see section "D636 and D637 Accessories"):

- Free USB port
- USB starting-up module
- Configuration/commissioning cable
- Valve connection cable (6-pole + PE or 11-pole + PE)
- Adapter for M8 service connector (not necessary for valves with CANopen® interface)
- Power pack 24 V DC / 2 A

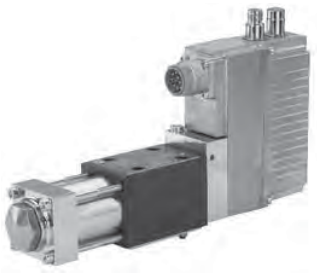

D636 Series Servovalve with rated flow up to 40 l/min (10.6 gpm)

Technical data	Description
Design	Single-stage spool valve with bushing
Actuation	Directly with permanent magnet linear force motor
Valve configuration	2-way, 3-way, 4-way and 2x2-way operation
Mounting pattern	ISO 4401-03-03-0-05 (with or without leakage port Y)
Diameter of ports	7.9 mm (0.31 in)
Installation position	As desired
Mass	2.5 kg (5.5 lb)
Storage temperature range	-40 °C to +80 °C (-40 °F to +176 °F)
Ambient temperature range	-20 °C to +60 °C (-4 °F to +140 °F)
Vibration resistance	30 g, 3 axes, 10 Hz to 2 kHz (as per EN 60068-2-6)
Shock resistance	50 g, 6 directions, half-sine 3 ms (as per EN 60068-2-27)

Hydraulic data
(measured at 140 bar (2,000 psi), fluid viscosity 32 mm²/s (cSt) and fluid temperature 40 °C (104 °F))

Technical data	Description
Maximum operating pressure range, port P, A, B	350 bar (5,000 psi)
Maximum operating pressure range, port T without Y	50 bar (725 psi)
Maximum operating pressure range, port T with Y	350 bar (5,000 psi)
Maximum operating pressure range, port Y	Depressurized to tank
Maximum flow	75 l/min (19.8 gpm)
Rated flow (model-dependent) at Δp rated 35 bar (500 psi)/land	5 / 10 / 20 / 40 l/min (1.3 / 2.6 / 5.3 / 10.6 gpm)
Leakage flow at zero lap (model-dependent)	0.15 / 0.3 / 0.6 / 1.2 l/min (0.04 / 0.08 / 0.16 / 0.32 gpm)
Hydraulic fluid	Hydraulic fluid as per DIN 51524 Parts 1 to 3 and ISO 11158 Other fluids upon request
Seal material	HNBR, FKM, others upon request
Temperature range of hydraulic fluid	-20 °C to +80 °C (-4 °F to +176 °F)
Viscosity range, recommended	15 mm²/s (cSt) to 100 mm²/s (cSt)
Viscosity range, maximum permissible	5 mm²/s (cSt) to 400 mm²/s (cSt)
Recommended cleanliness class for functional safety as per ISO 4406 [1)]	< 18 / 15 / 12
Recommended cleanliness class for endurance (wear) as per ISO 4406 [1)]	< 17 / 14 / 11

Typical static and dynamic data

Technical data	Description
Step response time for 0 to 100 % stroke (typical)	8 ms
Hysteresis	< 0.05 % (typical) 0.10 % (maximum)
Null shift at ΔT = 55 K	< 1.5 %
Manufacturing tolerance with respect to Q_rated	< 3 %

[1)] The cleanliness of the hydraulic fluid has a great effect on functional safety (reliable spool positioning, high resolution) and wear of the spool lands (pressure gain, leakage losses).

Electrical data	Description
Duty factor	100 %
Degree of protection as per EN 60529	IP 65 with mounted mating connectors or with mounted dust protection caps with sealing function
Supply voltage	18 V DC to 32 V DC (see Electronics section)
Maximum current consumption	1.7 A
Fuse protection, external, per valve	2 A (slow-blowing)
Power consumption of motor in neutral position	9.6 W (0.4 A at 24 V DC)
Maximum power consumption	28.8 W (1.2 A at 24 V DC)
EM compatibility	Emitted interference as per EN 61000-6-4:2005, (CANopen® and Profibus-DP®); Emitted interference as per EN 61000-6-3:2005, (EtherCAT®); Immunity to interference as per EN 61000-6-2:2005, (evaluation criterion A);
Connector type	See Electronics section
Triggering electronics	Integrated in the valve, see Electronics section

Characteristic curves (typical) [1)]

STEP RESPONSE

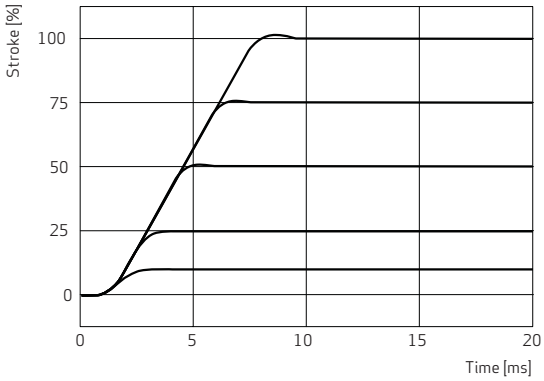

FREQUENCY RESPONSE

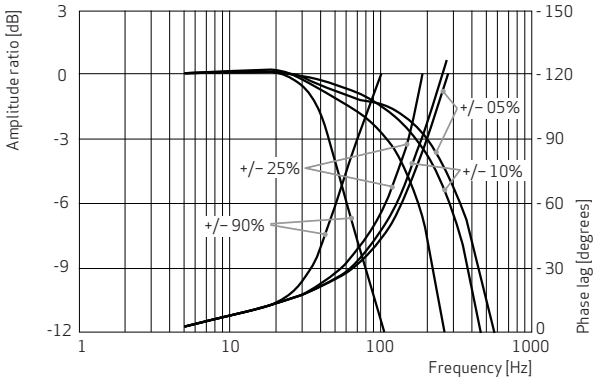

PRESSURE SIGNAL CURVE
(valve with zero lap)

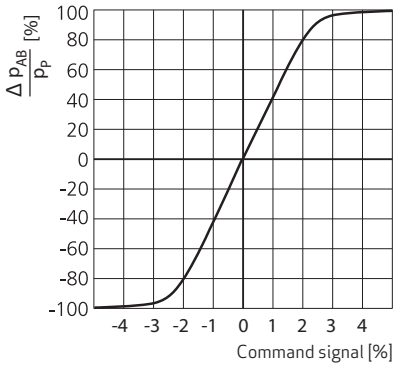

VALVE FLOW SIGNAL CURVE
(valve with zero lap)

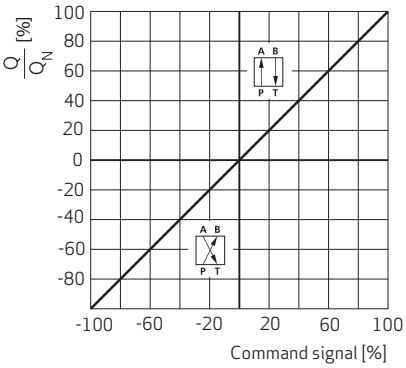

[1)] At operating pressure p_P = 140 bar (2,000 psi), fluid viscosity ν = 32 mm²/s (cSt) and a fluid temperature of 40° C (104 °F)

INSTALLATION DRAWINGS FOR VALVES WITH CANOPEN FIELDBUS CONNECTOR

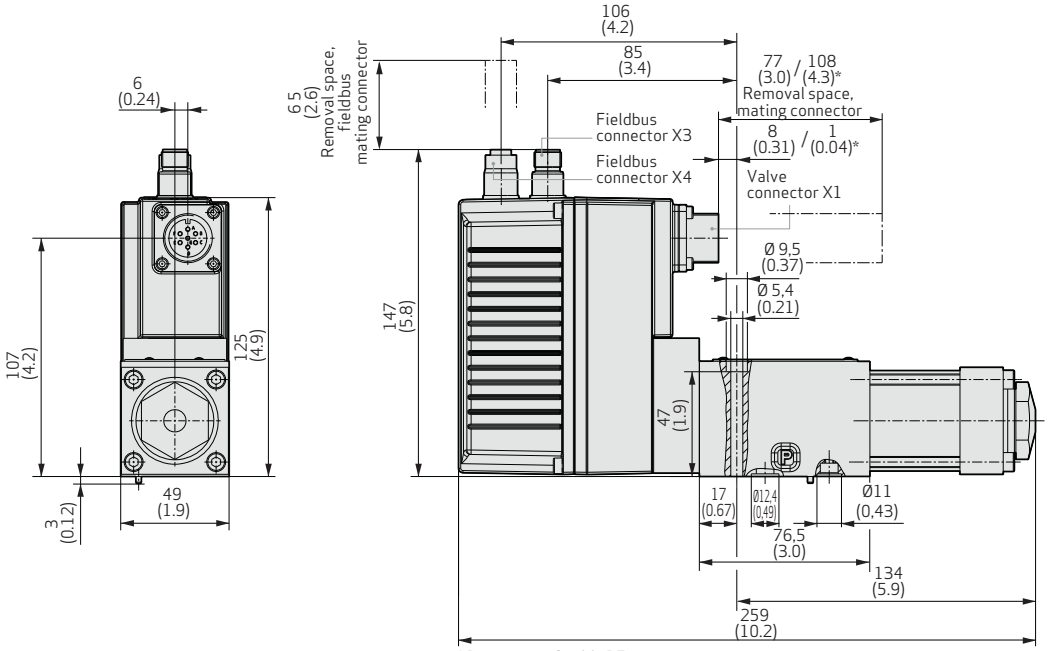

* Dimensions for 11+PE connector

INSTALLATION DRAWINGS FOR VALVES WITH PROFIBUS-DP OR ETHERCAT FIELDBUS CONNECTOR

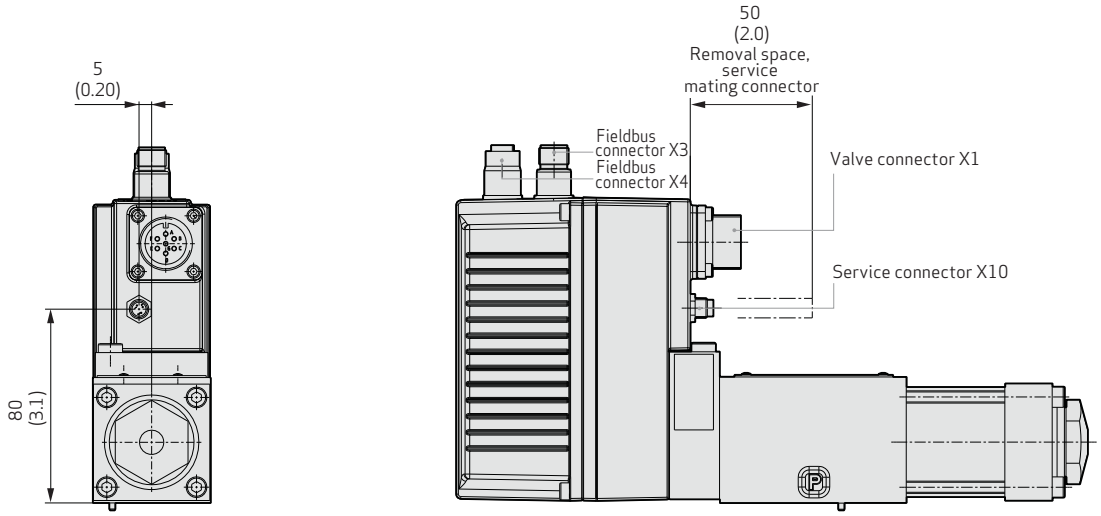

INSTALLATION DRAWINGS FOR VALVES WITH ANALOG ACTIVATION

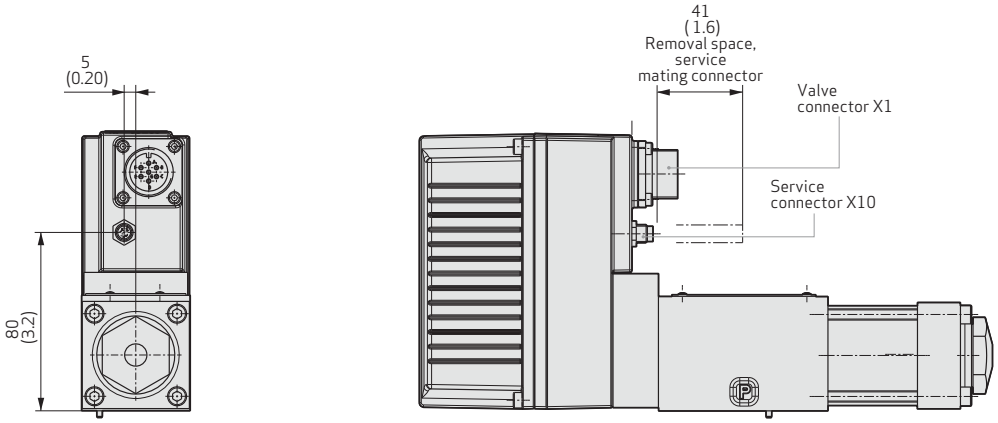

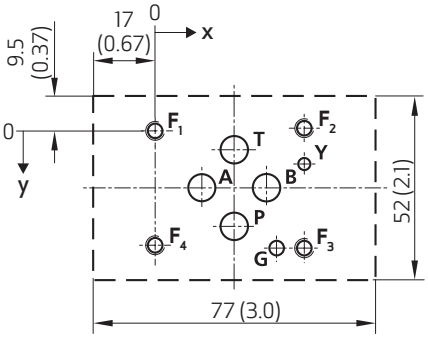

Mounting pattern of mounting surface

(ISO 4401-03-03-0-05)
Flatness of mounting surface < 0.01 mm (0.0004 in) over 100 mm (3.94 in), average surface finish R_a = 0.8 µm (0.0000314 in)

	P	A	B	T	X[1]	Y	F_1	F_2	F_3	F_4	G[2]
	Ø 7.5 (0.30)	Ø 7.5 (0.30)	Ø 7.5 (0.30)	Ø 7.5 (0.30)		Ø 3.3 (0.13)	M5	M5	M5	M5	Ø 4 (0.16)
X	21.5 (0.85)	12.7 (0.50)	30.2 (1.19)	21.5 (0.85)		40.5 (1.59)	0	40.5 (1.59)	40.5 (1.59)	0	33 (1.30)
Y	25.9 (1.02)	15.5 (0.61)	15.5 (0.61)	5.1 (0.20)		9 (0.35)	0	-0.75 (-0.03)	31.75 (1.25)	31 (1.22)	31.75 (1.25)

[1] Do not drill port X, as not sealed in the valve.
[2] Minimum 4 mm (0.157 in) depth

D636 - Spare parts

Part designation	Description	Part number
Shipping plate		B46035-001
O-rings for ports P, T, A, B (4 rings per valve required)	ID 9.25 x Ø 1.8: HNBR 90 Shore (ID 0.36 x Ø 0.07)	B97009-013
O-ring for ports P, T, A, B (4 rings per valve required)	ID 9.25 x Ø 1.8: FKM 90 Shore (ID 0.36 x Ø 0.07)	-42082-013
O-ring for port Y	ID 7.65 Ø 1.8: HNBR 90 Shore (ID 0.3 x Ø 0.07)	B97009-012
O-ring for port Y	ID 7.65 Ø 1.8: FKM 90 Shore (ID 0.3 x Ø 0.07)	-42082-012

D636 - Accessories

Part designation	Description	Part number
Service sealing kit with O-rings for ports P, T, A, B, Y	HNBR 90 Shore	B97215-H630F63
Service sealing kit with O-rings for ports P, T, A, B, Y	FKM 90 Shore	B97215-V630F63
Installation screws of servovalve (4 screws per valve required)	M5x55, ISO 4762-10.9 tightening torque: 6.8 Nm (60 in-lbs)	A03665-050-055
Flushing plate for P, A, B, T, X, Y	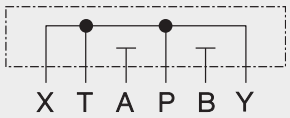	B46634-002

D636 - Documents

Designation	Description	Part number
Manual D636 Series Servovalves	Operating instructions	CA45707-001 [1]

[1] Download the document at www.moog.com/industrial/literature

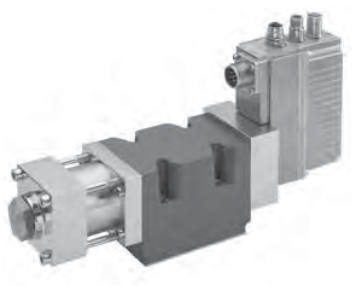

D637 Series Servovalve with rated flow up to 100 l/min (26.4 gpm)

Technical data	Description
Design	Single-stage spool valve with bushing
Actuation	Directly with permanent magnet linear force motor
Valve configuration	2-way, 3-way, 4-way and 2x2-way operation
Mounting pattern	ISO 4401-05-05-0-05 (with or without leakage port Y)
Diameter of ports	11.5 mm (0.45 in)
Installation position	As desired
Mass	7.9 kg (17.4 lb)
Storage temperature range	-40 °C to +80 °C (-40 °F to +176 °F)
Ambient temperature range	-20 °C to +60 °C (-4 °F to +140 °F)
Vibration resistance	30 g, 3 axes, 10 Hz to 2 kHz (as per EN 60068-2-6)
Shock resistance	50 g, 6 directions, half-sine 3 ms (as per EN 60068-2-27)

Hydraulic data
(measured at 140 bar (2,000 psi), fluid viscosity 32 mm²/s (cSt) and fluid temperature 40 °C (104 °F))

Technical data	Description
Maximum operating pressure range, port P, A, B	350 bar (5,000 psi)
Maximum operating pressure range, port T, T_1 without Y	50 bar (725 psi)
Maximum operating pressure range, port T, T_1 with Y	210 bar (3,000 psi)
Maximum operating pressure range, port Y	Depressurized to tank
Maximum flow	180 l/min (47.6 gpm)
Rated flow (model-dependent) at Δp rated 35 bar (500 psi)/land	60 / 100 l/min (15.9 / 26.4 gpm)
Leakage flow at zero lap (model-dependent)	1.2 / 2 l/min (0.32 / 0.53 gpm)
Hydraulic fluid	Hydraulic fluid as per DIN 51524 Parts 1 to 3 and ISO 11158 Other fluids upon request
Seal material	NBR, FKM, others upon request
Temperature range of hydraulic fluid	-20 °C to +80 °C (-4 °F to +176 °F)
Viscosity range, recommended	15 mm²/s(cSt) to 100 mm²/s (cSt)
Viscosity range, maximum permissible	5 mm²/s (cSt) to 400 mm²/s (cSt)
Recommended cleanliness class for functional safety as per ISO 4406 [1)]	< 18 / 15 / 12
Recommended cleanliness class for endurance (wear) as per ISO 4406 [1)]	< 17 / 14 / 11

Typical static and dynamic data

Technical data	Description
Step response time for 0 to 100 % stroke (typical)	14 ms
Hysteresis	< 0.05 % (typical) 0.10 % (maximum)
Null shift at ΔT = 55 K	< 1.5 %
Manufacturing tolerance with respect to Q_rated	< 3 %

[1)] The cleanliness of the hydraulic fluid has a great effect on functional safety (reliable spool positioning, high resolution) and wear of the spool lands (pressure gain, leakage losses).

Electrical data	Description
Duty factor	100 %
Degree of protection as per EN 60529	IP 65 with mounted mating connectors or with mounted dust protection caps with sealing function
Supply voltage	18 V DC to 32 V DC (see Electronics section)
Maximum current consumption	3.0 A
Fuse protection, external, per valve	3.15 A (slow-blowing)
Power consumption of motor in neutral position	9.6 W (0.4 A at 24 V DC)
Maximum power consumption	55.2 W (2.3 A at 24 V DC)
EM compatibility	Emitted interference as per EN 61000-6-4:2005, (CANopen® and Profibus-DP®); Emitted interference as per EN 61000-6-3:2005, (EtherCAT®); Immunity to interference as per EN 61000-6-2:2005, (evaluation criterion A);
Connector type	See Electronics section
Triggering electronics	Integrated in the valve, see Electronics section

Characteristic curves (typical) [1)]

STEP RESPONSE 60 L/MIN (15.9 GPM) VERSION

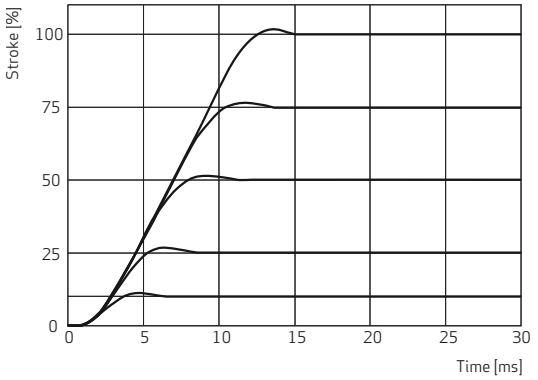

STEP RESPONSE 100 L/MIN (26.4 GPM) VERSION

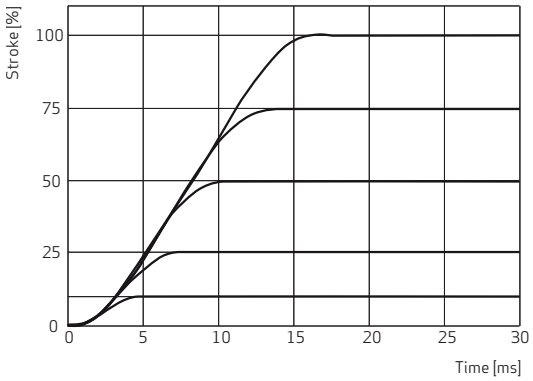

FREQUENCY RESPONSE 60 L/MIN (15.9 GPM) VERSION

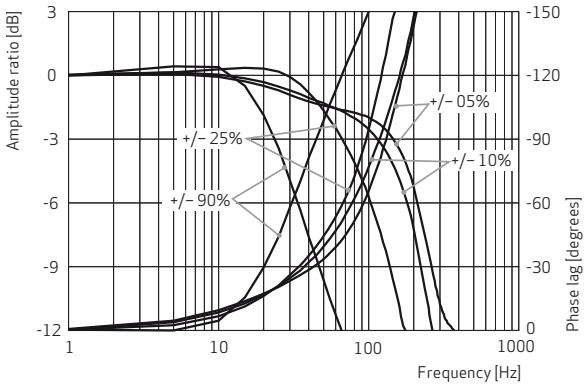

FREQUENCY RESPONSE 100 L/MIN (26.4 GPM) VERSION

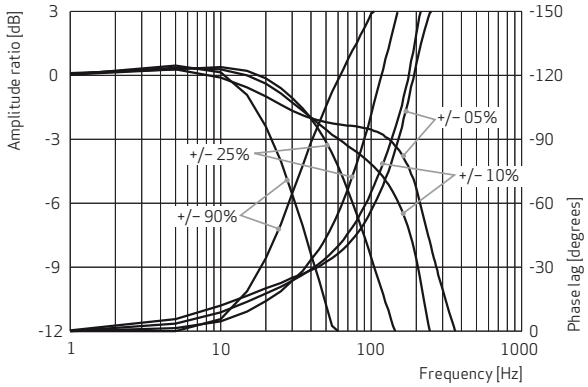

PRESSURE CHARACTERISTIC CURVE
(valve with zero lap)

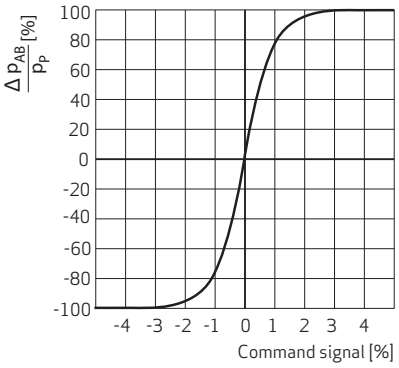

FLOW SIGNAL CHARACTERISTIC CURVE
(valve with zero lap)

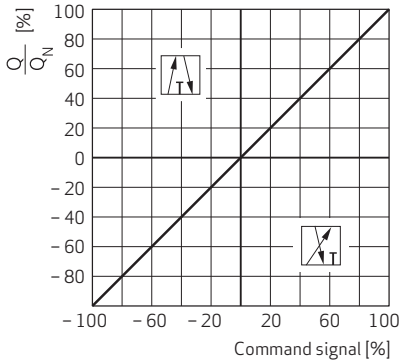

[1)] At operating pressure p_p = 140 bar (2,000 psi), fluid viscosity ν = 32 mm²/s (cSt) and a fluid temperature of 40 °C (104 °F)

INSTALLATION DRAWINGS FOR VALVES WITH CANOPEN FIELDBUS CONNECTOR

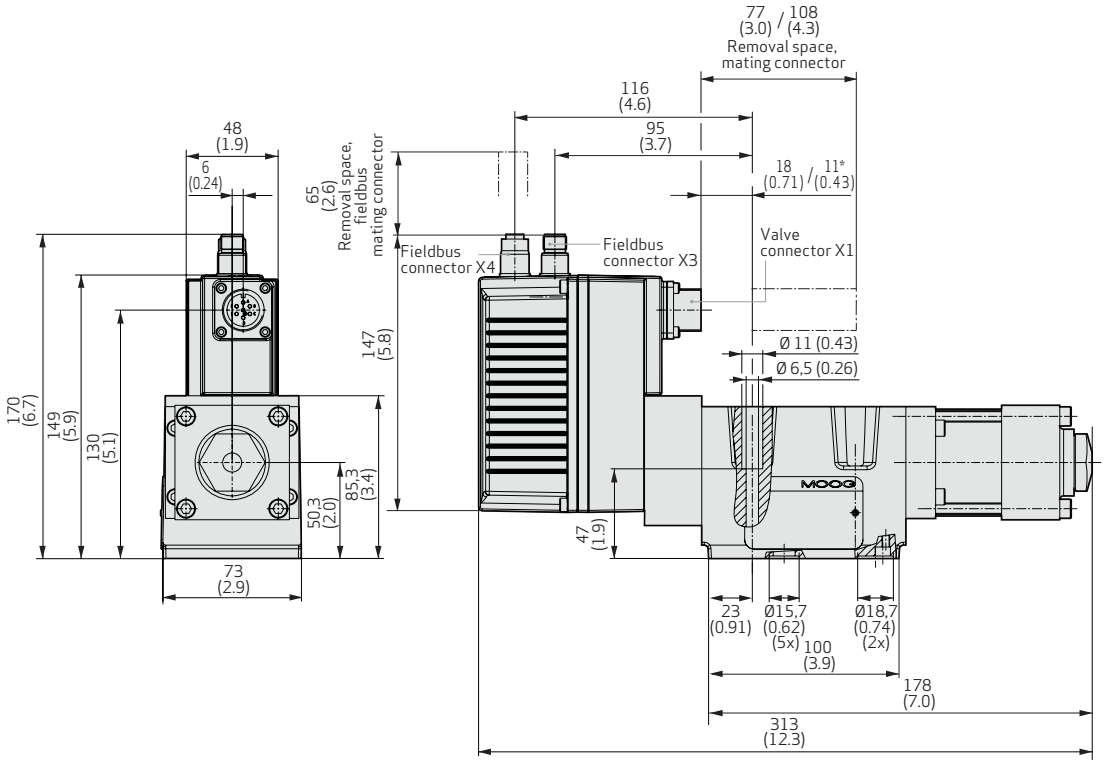

* Dimensions for 11+PE connector

INSTALLATION DRAWINGS FOR VALVES WITH PROFIBUS-DP OR ETHERCAT FIELDBUS CONNECTOR

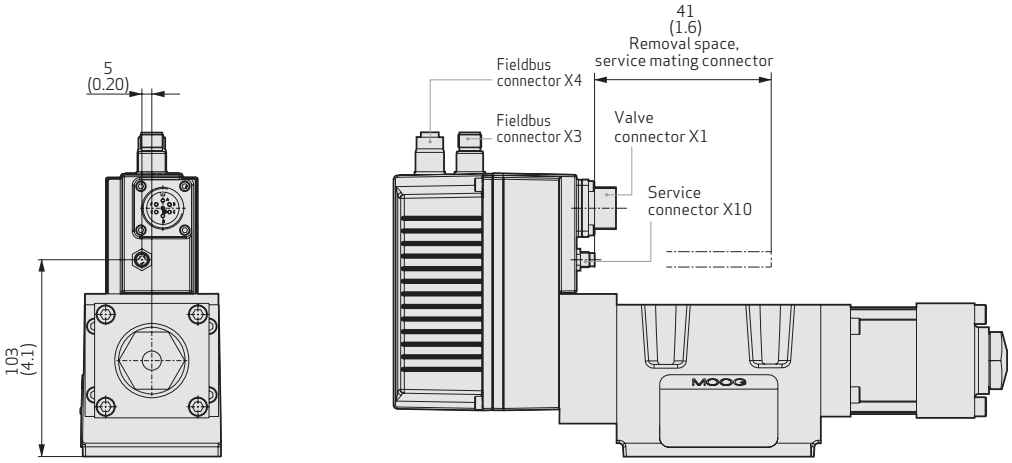

INSTALLATION DRAWINGS FOR VALVES WITH ANALOG ACTIVATION

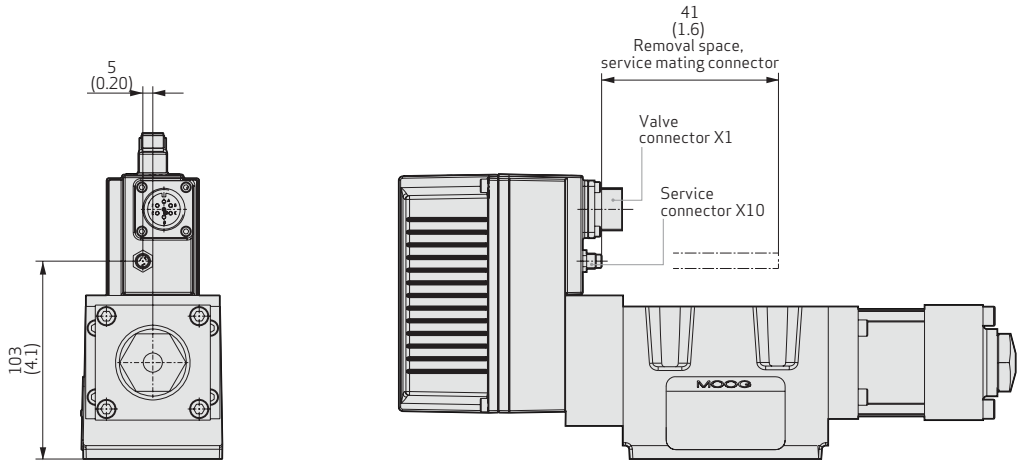

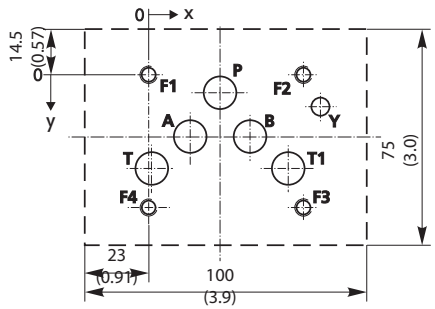

Mounting pattern of mounting surface

(ISO 4401-05-05-0-05 without X port)
Flatness of mounting surface < 0.01 mm (0.0004 in) over 100 mm (3.94 in), average surface finish R_a = 0.8 µm (0.0000314 in)

	P	A	B	T	T_1	X[1)]	Y	F_1	F_2	F_3	F_4
	Ø 11.2 (0.44)	Ø 11.2 (0.44)	Ø 11.2 (0.44)	Ø 11.2 (0.44)	Ø 11.2 (0.44)		Ø 6.3 (0.25)	M6	M6	M6	M6
X	27 (1.06)	16.7 (0.66)	37.3 (1.47)	3.2 (0.13)	50.8 (2.00)		62 (2.44)	0	54 (2.13)	54 (2.13)	0
Y	6.3 (0.25)	21.4 (0.84)	21.4 (0.84)	32.5 (1.28)	32.5 (1.28)		11 (0.43)	0	0	46 (1.81)	46 (1.81)

[1)] Do not drill port X, as not sealed in the valve.

D637 - Spare parts

Part designation	Description	Part number
Shipping plate		A40503
O-rings for ports P, T_1, A, B (5 rings per valve required)	ID 12.4 x Ø 1.8: NBR 90 Shore (ID 0.5 x Ø 0.07)	-45122-004
O-ring for ports P, T_1, A, B (5 rings per valve required)	ID 12.4 x Ø 1.8: FKM 90 Shore (ID 0.5 x Ø 0.07)	-42082-004
O-ring for port Y	ID 15.6 Ø 1.8: NBR 90 Shore (ID 0.61 x Ø 0.07)	-45122-011
O-ring for port Y	ID 15.6 Ø 1.8: FKM 90 Shore (ID 0.61 x Ø 0.07)	-42082-011

D637 - Accessories

Part designation	Description	Part number
Service sealing kit with O-rings for ports P, T, T_1, A, B, Y	NBR 90 Shore	B97215-N681-10
Service sealing kit with O-rings for ports P, T, T_1, A, B, Y	FKM 90 Shore	B97215-V681-10
Installation screws of servovalve (4 screws per valve required)	M6x60, ISO 4762-10.9 tightening torque 11 Nm (97 in-lbs)	A03665-060-060
Flushing plate for P, A, B, T, T_1, X, Y		B67728-001
Flushing plate for P, A, B, T, T_1, X, Y		B67728-002
Flushing plate for P, A, B, T, T_1, X, Y		B67728-003

D637 - Documents

Designation	Description	Part number
Manual D637 Series Servovalves	Operating instructions	Upon request [1)]

[1)] Download the document at www.moog.com/industrial/literature

D636 and D637 - Accessories

Part designation	Description	Part number
Dust protection cap for fieldbus connector with external thread X3	Required for operation without mating connector (IP protection)	C55823-001
Dust protection cap for fieldbus connector with internal thread X4	Required for operation without mating connector (IP protection)	CA24141-001
Mating connector for 6-pole + PE connector, IP65	EN 175201-804, usable cable with minimum Ø 10 mm (0.394 in), maximum Ø 12 mm (0.472 in)	B97007-061
Mating connector for 11-pole + PE connector, IP65	EN 175201-804, usable cable with minimum Ø 11 mm (0.433 in), maximum Ø 13 mm (0.512 in)	B97067-111
6-pole + PE cable (3 m (9.7 ft))		C21033-003-001
11-pole + PE cable (3 m (9.7 ft))		C21031-003-001
Configuration / commisioning software		Upon request
USB starting-up module		C43094--001
Configuration / starting-up cable (2 m (6.4 ft))		TD3999-137
Adapter for M8 service connector	Configuration /starting-up cable TD3999-137 is also required	CA40934-001
SELV power pack (10 A, 24 V DC)		D137-003-001
Power supply cable (2 m (6.4 ft))		B95924-002

D636 and D637 - Documents

Designation	Description	Part number
Technical Note TN 353	Protective grounding and electrical shielding of hydraulic valves with integrated electronics	CA58437-001 [1)]
Technical Note TN 494	Permissible cable lengths for connecting hydraulic valves with integrated electronics	CA48851-001 [1)]

[1)] Download the document at www.moog.com/industrial/literature

Moog Global Support™ is our promise to offer world-class Repair and Maintenance Services delivered expertly by our trained technicians. With the reliability only available from a leading manufacturer with facilities around the world, Moog offers you service and expertise you can count on to keep your equipment operating as it should.

This promise offers many benefits to our customers including:

- Reduce your downtime by keeping critical machines running in peak performance
- Protect your investment by ensuring reliability, versatility and long-life of products
- Better plan your maintenance activities and make systematic upgrades
- Leverage our flexible programs to meet unique service requirements of your facility

Look to Moog for global support including:

- Repair services using OEM parts are performed by trained technicians to the latest specifications
- Stock management of spare parts and products to prevent unplanned downtime
- Flexible programs, tailored to your needs such as upgrades, preventative maintenance and annual/ multi-year contracts
- On-site services bring the expertise to you, providing quicker commissioning, set-up and diagnostics
- Access to reliable services that are guaranteed to offer consistent quality anywhere in the world

For more information on Moog Global Support™, visit **www.moog.com/industrial/service**.

Model number (established by factory)

D 636 ☐☐☐☐☐ - ☐☐☐☐

Type designation

1 2 3 4 5 6 7 8 9 10 11 12 - 13 14 15 16

☐☐☐ ☐☐ ☐☐ ☐☐ ☐☐ ☐ - ☐☐ ☐☐ **A1**

Specification status	
–	Series specification
Z	Special specification

Model designation

Factory identification

Variant

1	**Valve type**
R	Servovalve with integrated digital electronics

2	**Rated flow Q_N per spool land [l/min (gpm)]**	
	Δp_N = 35 bar (500 psi)	Δp_N = 5 bar (75 psi)
02	5 (1.3)	2 (0.53)
04	10 (2.6)	4 (1.1)
08	20 (5.3)	8 (2.1)
16	40 (10.6)	16 (4.2)

3	**Maximum operating pressure [bar (psi)]**
K	350 (5,000)

4	**Bushing / spool design**
O	4-way: zero lap, linear characteristic curve
A	4-way: 1.5 to 3 % positive overlap, linear characteristic curve
D	4-way: 10 % positive overlap, linear characteristic curve
Z	2x2-way: P→A, B→T, only with Y port
X	Special spool, upon request

5	**Linear force motor**	**Series**
1	Standard	D636

6	**Spool position without electrical supply**
M	Mid position [1]
F	P→B, A→T connected (approximately 10 % open)
D	P→A, B→T connected (approximately 10 % open)

- Options sometimes only for an additional charge.
- Not all combination options available.
- Preferred versions are marked in gray.

7	**Y port**	
0	Closed with screw cap	P_{Tmax} = 50 bar (725 psi)
3	Open, with filter element	P_T > 50 bar (725 psi)

8	**Seal material**
H	HNBR
V	FKM Others upon request

9	**Valve connector X1**
S	6-pole + PE EN 175201-804
E	11-pole + PE EN 175201-804

10	**Signals for 100 % spool stroke** (dead band compensation upon request)	
	Input signal	Measurement output
M	±10 V DC	4 to 20 mA
X	±10 mA	4 to 20 mA
E	4 to 20 mA	4 to 20 mA
9	Field bus digital[2]	

11	**Supply voltage**
2	24 V DC (18 to 32 V DC)

13	**Enable function**
A	When the enable signal is deactivated the spool takes up a presettable controlled neutral position.
B	Linear force motor without enable signal de-energized.
K[6]	When the enable signal is deactivated the spool takes up a presettable controlled neutral position. Spool position monitoring at pin 11 .
L[6]	Linear force motor without enable de-energized. Spool position monitoring at pin 11 .
	Others upon request.

14	**Field bus connector X3, X4**
C	CANopen
D	Profibus-DP [3]
E	EtherCAT [3]
O	Without [3]

15	**Service connector X10**
O1	Without [4]
K1	With [5]

[1] This does not correspond with bushing / spool design O, A to the hydraulic center position
[2] Only in conjunction with field bus connector "C, D, E" (changeover to analog signals „M, X, E" possible)
[3] Valve parameterization with commissioning software „Moog Valve Configuration Software" using M8 service connector
[4] Only in conjunction with field bus connector "C"
[5] Only in conjunction with field bus connector "D, E, O"
[6] Only in conjunction with connector "E"

Model number (established by factory)

D 637 ☐☐☐☐☐ - ☐☐☐☐

Type designation

1 2 3 4 5 6 7 8 9 10 11 12 - 13 14 15 16

☐☐☐ ☐ ☐ ☐ ☐ ☐ ☐ ☐ ☐ - ☐ ☐ ☐☐ **A1**

Specification status	
–	Series specification
Z	Special specification

Model designation

Factory identification

Variant

1	**Valve type**
R	Servovalve with integrated digital electronics

2	**Rated flow Q_N per spool land [l/min (gpm)]**	
	Δp_N = 35 bar (500 psi)	Δp_N = 5 bar (75 psi)
24	60 (15.9)	24 (6.3)
40	100 (26.4)	40 (10.6)

3	**Maximum operating pressure [bar (psi)]**
K	350 (5,000)

4	**Bushing / spool design**
O	4-way: zero lap, linear characteristic curve
A	4-way: 1.5 to 3 % positive overlap, linear characteristic curve
D	4-way: 10 % positive overlap, linear characteristic curve
Z	2x2-way: P→A, B→T, only with Y port
X	Special spool, upon request

5	**Linear force motor**	**Series**
2	Standard	D637

6	**Spool position without electrical supply**
M	Center position [1]
F	P→B, A→T connected (approximately 10 % open)
D	P→A, B→T connected (approximately 10 % open)

7	**Y port**	
0	Closed with screw cap	P_{Tmax} = 50 bar (725 psi)
3	Open, with filter element	P_T > 50 bar (725 psi)

8	**Seal material**
N	NBR
V	FKM Others upon request.

9	**Valve connector X1**
S	6-pole + PE EN 175201-804
E	11-pole + PE EN 175201-804

10	**Signals for flow Q and pressure p**	
	Input signal	Measurement output
M	±10 V	4 to 20 mA
X	±10 mA	4 to 20 mA
E	4 to 20 mA	4 to 20 mA
9	Field bus digital[2]	
	Actual value output Spool position 4 to 20 mA	

11	**Supply voltage**
2	24 V DC (18 to 32 V DC)

13	**Enable function**
A	When the enable signal is deactivated the spool takes up a settable controlled neutral position.
B	Linear force motor without enable signal de-energized.
K[6]	When the enable signal is deactivated the spool takes up a settable controlled neutral position. Spool position monitoring at pin 11.
L[6]	Linear force motor without enable de-energized. Spool position monitoring at pin 11.
	Others upon request.

14	**Field bus connector X3, X4**
C	CANopen
D	Profibus-DP [3]
E	EtherCAT [3]
O	Without [3]

15	**Service connector X10**
O1	Without [4]
K1	With [5]

- Options sometimes only for an additional charge.
- Not all combination options available.
- Preferred versions are marked in gray.

[1] This does not correspond with bushing / spool design O, A to the hydraulic center position
[2] Only in conjunction with field bus connector "C, D, E" (changeover to analog signals „M, X, E" possible)
[3] Valve parameterization with commissioning software „Moog Valve Configuration Software" via M8 service connector
[4] Only in conjunction with field bus connector "C"
[5] Only in conjunction with field bus connector "D, E, O"
[6] Only in conjunction with connector "E"

TAKE A CLOSER LOOK.

Moog designs a range of motion control products that complement the performance of those featured in this catalog. Visit our website for more information and contact the Moog facility nearest you.

Argentina
+54 11 4326 5916
info.argentina@moog.com

Australia
+61 3 9561 6044
info.australia@moog.com

Brazil
+55 11 3572 0400
info.brazil@moog.com

Canada
+1 716 652 2000
info.canada@moog.com

China
+86 21 2893 1600
info.china@moog.com

Finland
+358 10 422 1840
info.finland@moog.com

France
+33 1 4560 7000
info.france@moog.com

Germany
+49 7031 622 0
info.germany@moog.com

Hong Kong
+852 2 635 3200
info.hongkong@moog.com

India
+91 80 4057 6605
info.india@moog.com

Ireland
+353 21 451 9000
info.ireland@moog.com

Italy
+39 0332 421 111
info.italy@moog.com

Japan
+81 46 355 3767
info.japan@moog.com

Korea
+82 31 764 6711
info.korea@moog.com

Luxembourg
+352 40 46 401
info.luxembourg@moog.com

The Netherlands
+31 252 462 000
info.thenetherlands@moog.com

Norway
+47 6494 1948
info.norway@moog.com

Russia
+7 8 31 713 1811
info.russia@moog.com

Singapore
+65 677 36238
info.singapore@moog.com

South Africa
+27 12 653 6768
info.southafrica@moog.com

Spain
+34 902 133 240
info.spain@moog.com

Sweden
+46 31 680 060
info.sweden@moog.com

Switzerland
+41 71 394 5010
info.switzerland@moog.com

United Kingdom
+44 168 429 6600
info.uk@moog.com

USA
+1 716 652 2000
info.usa@moog.com

www.moog.com/industrial

Moog is a registered trademark of Moog Inc. and its subsidiaries. All trademarks as indicated herein are the property of Moog Inc. and its subsidiaries.
CANopen is a registered trademark of CAN in Automation (CiA)
EtherCAT is a registered trademark of Beckhoff Automation GmbH
Profibus-DP is a registered trademark of PROFIBUS Nutzerorganisation e.V.
Windows and Vista are registered trademarks of Microsoft Corporation

©2010 Moog Inc.

D636 and D637 Series Servovalves
Moog Germany/PDF/Rev. 2, March 2010, Id. CDL28329-en

APPENDIX- A2:

”FABRICATION, INSTALLATION AND COMMISSIONING OF TEST FACILITY FOR BRIDGE EXPANSION JOINTS AT CSIR - CRRI, NEW DELHI:

PACKAGE-3:

INSTRUMENTATION AND CONTROL SYSTEM FOR THREE TEST RIGS OF BRIDGE EXPANSION JOINT TESTING FACILITY”

PROPORTIONAL VALVES
SERIES D941

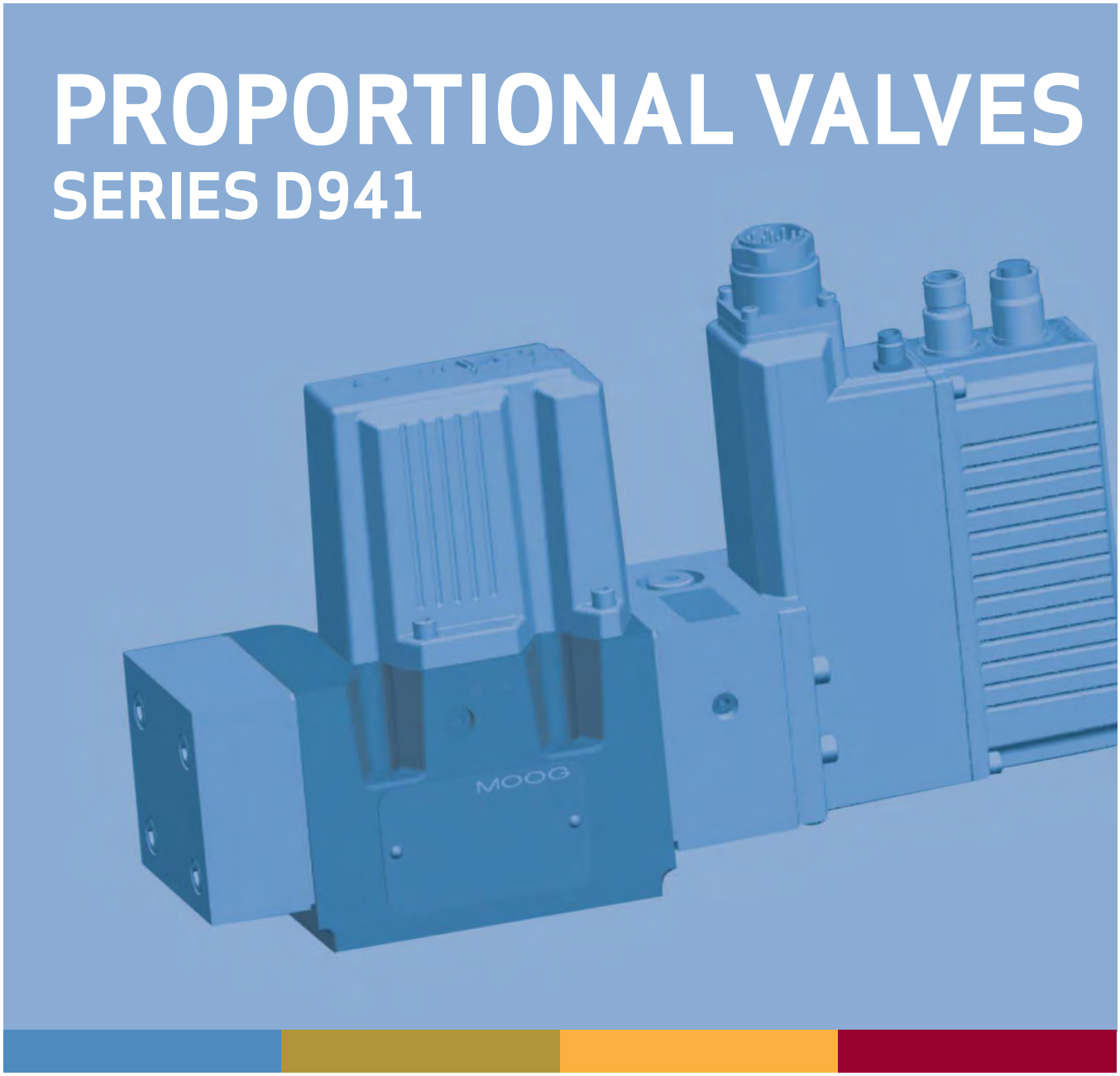

A TWO STAGE pQ-PROPORTIONAL VALVES
WITH SERVOJET®-PILOT STAGE
INTEGRATED DIGITAL ELECTRONICS
AND OPTIONAL FIELD BUS INTERFACE

WHAT MOVES YOUR WORLD

MOOG

CHAPTER	PAGE
General overview	2
Characteristics and benefits	3
Functional description	4
Operating modes	5
Electronics	7
Hydraulics w/Field Bus	10
Configuration Software	11
Technical data	12
Performance curves	13
Installation drawings	14
Fail-safe electronics	16
Fail-safe installation drawing	18
Accessories	19
Ordering information	20
Global support	23

EXCELLENCE IN MOTION CONTROL TECHNOLOGY

For over 50 years Moog has ranked amongst the leading providers of motion control technology with a focus on the production and application of high performance products. Today, Moog offers innovative products using state of the art control technology that contributes to improvements in the performance of machines.

MOOG SERVO- AND PROPORTIONAL VALVES

Moog in Germany has been producing servo- and proportional valves with integrated electronics for over 30 years. During this period, more than 400,000 valves have been delivered. Our servo- and proportional valves are successfully used in all kinds of applications in machine and plant construction.

TWO-STAGE pQ-PROPORTIONAL VALVES WITH A SERVOJET®-PILOT STAGE

The pQ-proportional valves of the D941 series are throttle valves for 2x2-, 3-, 4- or even 5-way applications.

The pQ-valves control flow and regulate pressure (upper or lower limiting pressure). Thus, they can be used for both pressure regulation as well as applying a pressure-limit. The regulating electronics for the spool position and the pressure are integrated in the valve as is a pressure sensor.

The valves have been continuously improved. The Jetpipe pilot stage is based on the steel pipe principle which has proved itself in various series of Moog valves over the past 15 years. The Jetpipe has been further developed into the ServoJet®-pilot stage.

Our Quality Management System conforms to DIN EN ISO 9001.

NOTICE

This catalog is for users with technical knowledge. To ensure that all necessary characteristics for function and safety of the system are covered, the user must check the suitability of the products described herein. Product descriptions provided herein are subject to changes that may be applied without prior notification. In case of doubt, please contact Moog.

Moog is a registered trademark of Moog Inc. and its subsidiaries. Unless stated otherwise, all trademarks mentioned herein are the property of Moog Inc. and its subsidiaries. For the full disclaimer refer to www.moog.com/literature/disclaimers.

©Moog Inc. 2006. All rights reserved. Changes reserved

For the most current information, visit www.moog.com/industrial

- Before commissioning, the complete hydraulic system must be flushed and the hydraulic fluid must be filtered.
- Please read the notes in the section entitled "Electronics", page 7
- In the same way as new valves, repaired valves / exchanged valves will be shipped with factory default settings.
- Prior to commissioning the valves, check for the correct configuration and any potentially changed parameters.

Q-, p-, pQ-FUNCTIONALITY

The valves offer full pQ-functionality and may be toggled between flow control and/or operating pressure control. Using the pQ-function, volume control and pressure control are available using a single proportional valve. The commutation takes place according to the parameterization via the Field Bus interface.

DIGITAL ELECTRONICS

The digital driver and control electronics are integrated into the valve. The valve electronics contain a microprocessor system which performs all important functions via the valve software it contains. The digital electronics enable the valve to be controlled across the entire working range.

FIELD BUS INTERFACE

The valves are parameterized, activated, and monitored via the built-in Field Bus interface (CANopen, Profibus DP V1 or EtherCAT). To reduce wiring, the Field Bus interface is provided with two plugs.
Thus, valves may be integrated into the bus without any external T-joints. In addition, up to two analog input commands and up to two analog actual value outputs are available.
Optionally, the valves are available without a Field Bus interface. In this case, the valve is controlled using analog inputs. Valve parameters are set using the integrated service socket.

DIGITAL ELECTRONICS

In addition to internal parameters such as pressure and volume flow, the valves are capable of controlling external signals such as position, speed, force etc. The active axis controllers may change as a result of defined events.

Our application engineers will be happy to assist you.

BENEFITS OF THE DIGITAL pQ-PROPORTIONAL VALVES D941 SERIES

- Field Bus data connection: electrically separated Field Bus-interface
- Diagnosis options: Integrated monitoring of the most important environmental and internet parameters; valve parameters may be changed on site or remotely.
- Flexibility: Since parameters may be downloaded using the Field Bus or the superior PLC-program, valve parameter may be tuned during a machine cycle on an operating machine.
- Pressure control configuration: up to 16 configurations may be saved and can be activated during operation.
- Superior control: The improved frequency response of this version allows high closed-loop position loop gain, providing excellent static and dynamic response and a superior control system performance. The improved valve dynamic performance is due to the extremely high natural frequency of the ServoJet®-pilot stage (500 Hz) and the implementation of advanced control algorithms, which is only possible with digital electronics.
- Reliability: The high pressure recovery of the ServoJet®-pilot stage (up to 80 % Δp at 100 % control signal) provides higher spool driving forces and ensures enhanced spool position repeatability.
- Safety: Fail-safe versions with a defined safe spool position using a spring or by an external supply cut off ensure operator safety.

TWO-STAGE DIGITAL pQ-PROPORTIONAL VALVE D941 SERIES

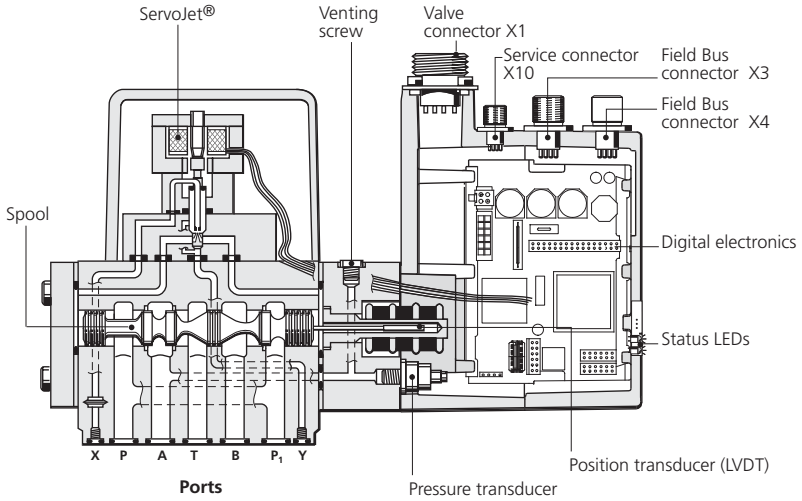

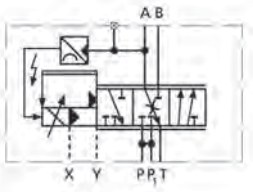

Hydraulic Symbol:

Symbol shown with pilot pressure and 24 V DC electric supply

SERVOJET®-PILOT STAGE

PRINCIPLE OF THE SERVOJET®-PILOT STAGE

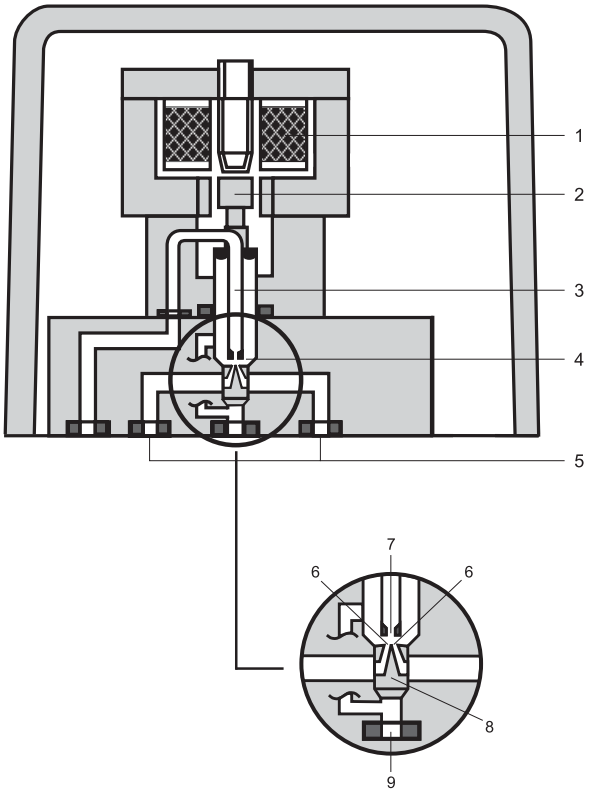

POS.	DESCRIPTION
1	Coil
2	Anchor
3	Jetpipe
4	Annular space below the nozzle
5	Control connections
6	Receiving Orifice's
7	Nozzle
8	Receiver
9	Return Port

FUNCTION OF THE SERVOJET®-PILOT STAGE

The ServoJet®-pilot stage is an improvement of the Jetpipe-pilot stage using the jet pipe principle. It consists of torque motor, jet pipe and manifold.

An electrical current through coil (pos. 1) of the ServoJet®-pilot stage causes the anchor (pos. 2) with the jet pipe (pos. 3) to move. The linked and compressed (by a special nozzle design) fluid jet hits one of the two valve openings (pos. 8) with a greater impact than the other.

This causes a pressure difference in the control connections (pos. 5) of the ServoJet®-pilot stage. The resulting volume flow moves the control spool of the main stage in the respective working direction (see picture, page 3). Return flow is via the annular space (pos. 4) below the nozzle to the return port (pos. 9)

OPERATING MODES

3-way valve in main line

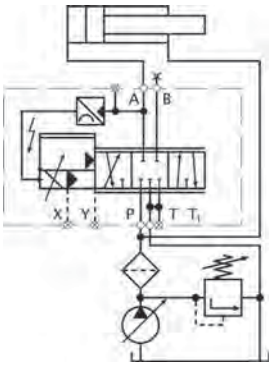

Optional X and Y external

The device operates as a 3-way pressure reducing valve with flow from P ➡ A or A ➡ T.
Only one load port is used.

5-way valve in main line

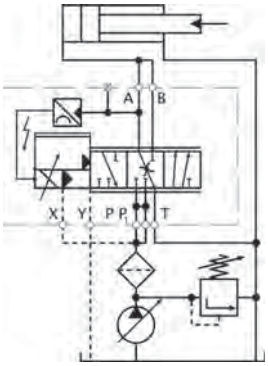

Only with X and Y external
P- and T-ports interchanged (does not conform to ISO 4401)

The device operates like the 3-way pQ-valve but with a doubled flow rate applied to the load.

A directional change in the motion of the load requires an external force.

4-way valve in main line

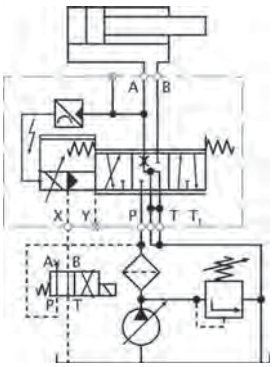

Optional Y external

From P ➡ A the valve operates like a 3-way pQ-valve.
From P ➡ B it allows only flow modulation.

By this means the direction of the load motion can be reversed (open loop velocity control for load retract).

2x2-way valve in bypass line

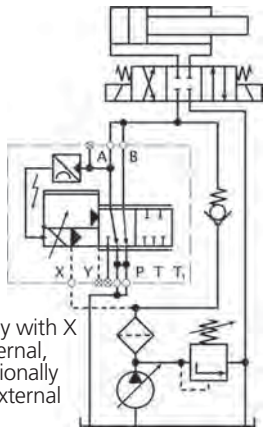

Only with X external, optionally Y external

The device has parallel flow paths and operates as an electrically adjustable pressure relief valve from A ➡ T and B ➡ T1, respectively. At zero command signal the valve is fully open, i.e. the pressure in the load ports is zero apart from minor pressure build up due to line leakage. A minimum pilot pressure (p_X >25 bar (357.25 psi)) has to be imposed. This can be achieved by a check valve with a 25 bar (357.25 psi) cracking pressure (as shown) or by a separate pilot supply pump.

PILOT PRESSURE

If large flows are required together with a high pressure drop across the valve, a sufficiently high pilot pressure has to be provided to overcome the jet forces. The following approximation holds for the pilot pressure p_x:

$$p_X \geq 8{,}5 \cdot 10^{-3} \cdot Q \cdot \sqrt{\Delta p}$$

p_x	[bar]	=	pilot pressure
Q	[l/min]	=	max. flow
Δp	[bar]	=	actual pressure drop per control edge

The pilot pressure p_x must exceed the return pressure of the ServoJet®-pilot stage by at least 25 bar (357.25 psi).

VENTING OF PRESSURE TRANSDUCER

Prior to first operation of the valve the internal lines of the pressure transducer must be carefully vented. When selecting the installation position of the valve care must be taken that the bleeding screw can become effective.

If the load is located higher than the pQ-Valve the load also must be vented at its highest point.

Attention: Vent only at reduced pressure! Danger of injury!

OPERATING MODES OF THE PROPORTIONAL VALVE

FLOW CONTROL (Q-CONTROL)

In this operating mode of the proportional valve, the spool position is controlled. The predefined command signal is proportional to a particular spool position.
The command signal (spool position command) is fed to the valve electronics. A position transducer (LVDT) measures the spool's actual position and forwards this information to the valve electronics. The electronic system compares the actual spool position and the command signal, and generates a signal to drive the ServoJet®-pilot stage, which then brings the spool into the correct position.
The position command can be influenced by parameters in the valve software (ie: linearization, ramping, dead band, sectionally defined amplification, etc).

PRESSURE CONTROL (p-CONTROL)

In this operating mode of the proportional valve, the pressure in port A is controlled. The predefined command signal corresponds to a particular pressure in port A. The command signal (pressure command in port A) is transmitted to the valve electronics. A pressure transducer measures the pressure in port A and feeds this to the valve electronics.

The electronic system compares the actual pressure signal and the command signal and generates a signal to drive the ServoJet®-pilot stage, which then brings the spool into the correct position.
The pressure control function can be influenced by parameters in the valve software (ie. ramping etc.). The pressure regulator functions as an extended PID controller. In the valve software, you can set the parameters of the PID controller.

FLOW CONTROL AND PRESSURE CONTROL (pQ-CONTROL)

This is a combination of flow and pressure control for which both command signals (flow and pressure) must be present. During the pQ-function, the command position calculated by the pressure controller is compared to the command position computed externally. The smaller of these is fed into the position control loop.

The following are examples of possible combinations:

- Flow control with pressure limiting control
- Forced changeover from one operating mode to the other

VALVE FLOW CALCULATIONS

The actual valve flow is dependent on the spool and the pressure drop Δp across the spool ends.

For a flow command value of 100% a rated pressure drop of Δp_N= 5 bar (71.45 psi) per control edge results in a rated flow Q_N. For other than the rated pressure drop the valve flow changes at a constant command signal according to the following formula.

$$Q = Q_N \cdot \sqrt{\frac{\Delta p}{\Delta p_N}}$$

Q	[l/min]	=	calculated flow
Q_N	[l/min]	=	rated flow
Δp	[bar]	=	actual valve pressure drop
Δp_N	[bar]	=	rated valve pressure drop

The actual valve flow Q must not exceed a mean velocity of 30m/s (96.54 ft/s) in the orifices P, A, B and T.

VOLUME FLOW DIAGRAM (4-WAY-FUNCTION)

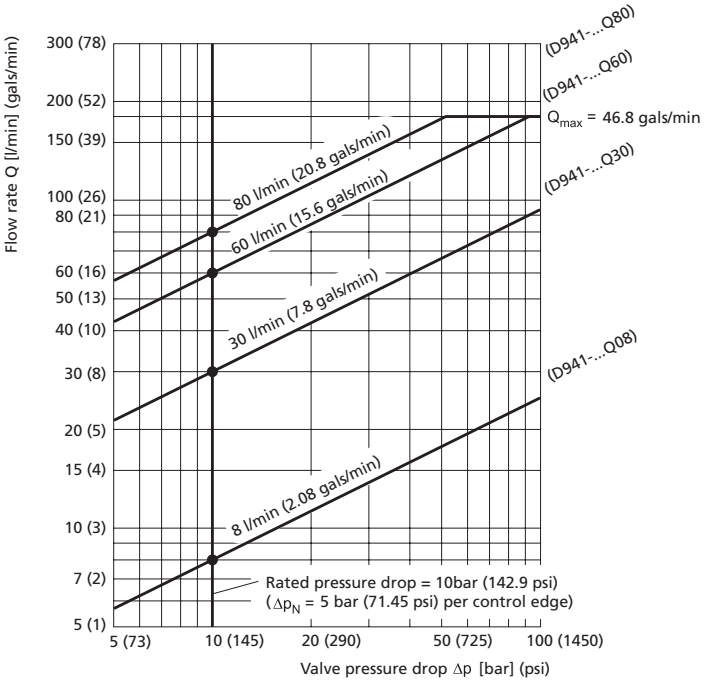

GENERAL REQUIREMENTS FOR VALVE ELECTRONICS

- Supply 24 V DC, min. 18 V DC, max. 32 V DC; current max. 350 mA for valve electronics. Additional supply 24 V DC for electrical failsafe valve and current 1.2A on pin 1 ➡ 2
- All signal lines, including those of external transducers, shielded.
- Shielding connected radially to ⊥ (0 V), power supply side, and connected to the mating connector housing (EMC).
- **EMC:** Meets the requirements of immunity: DIN EN 61000-6-2:2005 (criterion A) and emission according to DIN EN 61000-6-4:2005 (EtherCAT according to DIN EN 61000-6-3:2005).
- External fusing 0.5 A slow blow.
- Duty cycle 100 %
- Max. power consumption 8.4 W (350 mA at 24 V DC)
- Minimal cross-section PE-line ≥ 0,75 mm² (0.03 in²), other signal lines ≥ 0.25 mm² (0.01 in²).
- Consider voltage losses between cabinet and valve
- See also Moog technical note TN 494.
- Note: When making electrical connections to the valve (shield, ⏚) appropriate measures must be taken to ensure that locally different ground potentials do not result in excessive currents to ground
- See also Moog technical note TN 353.

SIGNALS AND WIRING FOR VALVES WITH ANALOGUE ACTIVATION/CONTROL DRIVE POSSIBILITIES

Valves with current command input
Command signal 0 to 10 mA (p func.), floating
Command signal 0 to ± 10 mA (Q func.), floating

The spool stroke of the valve for the volume flow function is proportional $I_4 = -I_5$ (at $I_7 = 0$).
The command signal I_4 = +10 mA equals 100 % valve opening P ➡ A and B ➡ T .
At 0 mA command the spool is in the central position.
In the pressure function (0 to 10 mA), the pressure is proportional at port A of the valve $I_7 = -I_5$ (at I_4 = 0 mA).
I_7 = +10 mA equals 100 % regulated pressure in port A.

Command signal 4 to 20 mA (p funct.), floating
Command signal 4 to ± 20 mA (Q funct.), floating

The spool stroke of the valve for the volume flow function is proportional $I_4 = -I_5$ (at $I_7 = 0$) .
The command signal I_4 = 20 mA equals 100 % valve opening P ➡ A and B ➡ T .
At 12 mA command the spool is in the central position. In pressure function (4 to 20 mA), the pressure is proportional at port A of the valve $I_7 = -I_5$ (at I_4 = 0 mA).
I_7 = + 20 mA equals 100 % regulated pressure in port A.

Valves for voltage control
Command signal 0 to 10 V (p funct.), floating
Command signal 0 to ± 10 V (Q funct.), floating

The spool stroke of the valve at volume flow function is proportional ($U_4 - U_5$). The command signal ($U_4 - U_5$) = +10 V equals 100 % valve opening P ➡ A and B ➡ T .
For 0 V command the spool is in the central position. In the p-function (0 to 10 V) the pressure in port A of the valve is proportional to ($U_7 - U_5$).
($U_7 - U_5$)= + 10 V equals 100 % regulated pressure in port A.

Actual value 4 to 20 mA

The actual spool position value for flow volume resp. pressure at port A at pressure function, can be measured at 6 and 8 (see diagram below). These signals can be used for monitoring and fault detection purposes. The spool stroke resp. pressure range corresponds 4 to 20 mA. At 12 mA command the spool is in the central position. 20 mA equals 100% valve opening P ➡ A und B ➡ T.

The position signal output 4 to 20 mA allows the detection of a cable break when I_{out} = 0 mA.

Circuit diagram for measurement of actual value I_{out} (position of spool) and I_8 (pressure in port A) for valves

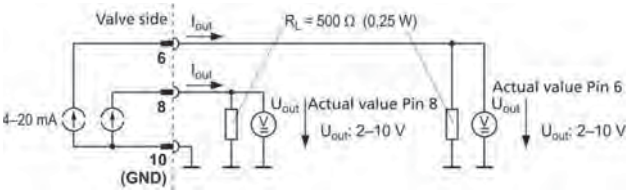

Note: Enable input
With enable signal of < 6.5 V the main spool will move to a safe position. Options:
a) Defined centered position, spool position ± 3% (unbiased pilot valve) Enable function A[1)]
b) End position (biased pilot valve). Enable function B[1)]

[1)] see type key pages 20 and 21

WIRING FOR VALVES WITH 11+PE-POLE CONNECTOR X1

To EN 175201 part 804, mating connector (metal) with leading protective ground connection (⏚).

Pin	Signal / Function	Voltage floating ±10 V, 0 to 10 V	Current floating ±10 mA, 0 to 10 mA, 4 to 20 mA[1]
1	Not used		
2	Not used		
3	Enable input	8,5 bis 32 V DC above GND: operation of the proportional valve enabled < 6,5 V DC above GND: Valve fail-safe condition	
4	Command input Flow function	$U_{in} = U_{4-5}$ R_{in} = 20 kΩ	$I_{in} = I_4 = -I_5$ (for I_7=0) [2] R_{in} = 200 Ω
5	Reference point Input rated command	Reference to ground for pin 4 and 7	common feedback for pin 4 and 7
6	Actual value output spool position	I_{out} = 4 to 20 mA based on GND (I_{out} is proportional to the spool position; the output is short circuit protected; for actual value output conversion I_{out} see page 6); R_L = 0 to 500 Ω	
7	Command input pressure function	$U_{in} = U_{7-5}$ R_{in} = 20 kΩ	$I_{in} = I_7 = -I_5$ (for I_4=0) [2] R_{in} = 200 Ω
8	Actual value output pressure	I_{out} = 4 to 20 mA referenced to GND (I_{out} proportional to the pressure in port A); the output is short circuit protected; for conversion of the actual value signal I_{out} see page 6); R_L = 0 to 500 Ω	
9	Supply Voltage	24 V DC (18 to 32 V DC) above GND	
10	Power ground	GND	
11	Digital output	Error monitoring [3]	
⏚	Protective conductor contact		

The potential differences between pins 4, 5 and 7 (measured against pin 10) each must be between -15 and +32 V.

1) Command signals I_{in} < 3 mA (due to cable break, for example) indicate a defect for signals 4 to 20 mA. The valve reaction to this defect may be customized and activated by the customer.

2) As pin 5 is the common feedback for pin 4 and pin 7, $-I_5 = I_4 + I_7$ applies.

3) Output may be factory programmed, "low" means error.
(e.g. difference between command value and actual value)

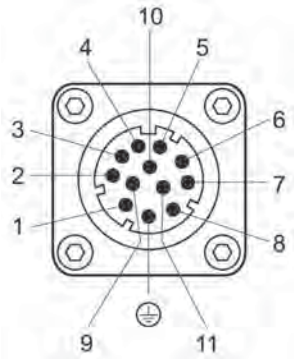

CAN-IN/OUT-MOUNTED CONNECTOR (X3, X4 / CODING A / 2 X M12X1 / 5-POLE)

Pin	Signal X3, X4	
1	CAN_SHLD	Shield
2	CAN_V+	not connected in the valve
3	CAN_GND	Ground
4	CAN_H	Transceiver H
5	CAN_L	Transceiver L

External thread
Pin contacts (X3)

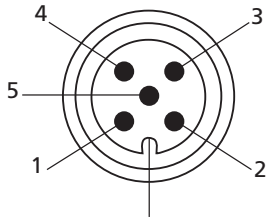

Coding pin

Internal thread
Bushing contacts (X4)

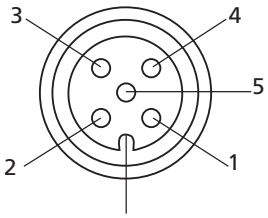

Coding pin

CAN-IN/OUT-MOUNTED CONNECTOR (X3, X4 / CODING B / 2 X M12X1 / 5-POLE)

Pin	Signal X3, X4	
1	Profi V+	Supply voltage 5 V of terminating resistors
2	Profi A	Receiving/sending data –
3	Profi GND	Ground
4	Profi B	Receiving/sending data +
5	Shield	Shield

External thread
Pin contacts (X3)

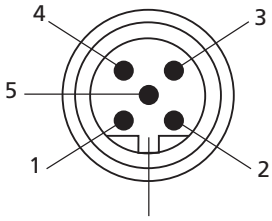

Coding pin

Internal thread
Bushing contacts (X4)

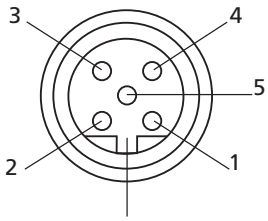

Coding pin

ETHERCAT-IN/OUT CONNECTOR (X3, X4 / CODING D / 2 X M12X1 / 4-POLE)

Pin	Signal X4 IN	Signal X3 OUT
1	TX + IN	TX + OUT
2	RX + IN	RX + OUT
3	TX – IN	TX – OUT
4	RX – IN	RX – OUT

Internal thread
Bushing contacts (X3)

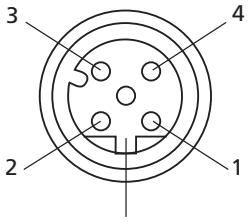

Coding pin

Internal thread
Bushing contacts (X4)

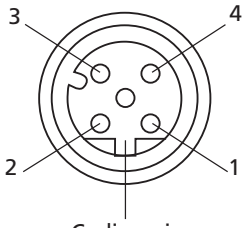

Coding pin

GENERAL

Modern automation technology is characterized by an increasing decentralization of processing functions via serial data communication systems. The use of serial bus systems instead of conventional communication technology ensures the increased flexibility of systems in terms of modifications and expansions.

It also has a tremendous potential for savings in project and installation costs in many areas of industrial automation. Among the benefits that have become viable through the use of Field Bus are additional options for parameterization, enhanced diagnosis options and the reduction of variants.

VDMA PROFILE

In one working group within the German Machinery and Plant Manufacturers' Association, a VDMA profile was created in collaboration with numerous well-known hydraulic system manufacturers. This profile describes communication between hydraulic components via a Field Bus. It defines uniform functions and parameters in a standardized exchange format.

CANopen

According to EN50325-4
CAN bus was originally developed for use in automobiles, but has been used in mechanical engineering in a variety of applications.
CAN bus is primarily designed for transmission security and speed.

CAN bus has the following features:

- Multi master system: Each participant can transmit and receive.
- Topology: Linear structure with short stub line
- Network extension and band widths:
  up to 25 m at 1 Mbit/s,
  up to 5,000 m at 25 kbit/s
- Addressing type: Message-oriented via identifier
  Priority assignment of the message via identifier.
- Safety: Hamming distance = 6, i.e. up to 6 individual errors/messages are recognized.
- Bus physics: ISO 11989,
- Max. number of participants: 127

PROFIBUS DP-V1

According to EN 61158
PROFIBUS has been developed for process and production industries and therefore is being supported by many manufacturers of control systems.

PROFIBUS has the following features:

- Multi master system: Several masters share access time and initiate communication. Slaves only react to requests
- Topology: Linear structure with short stub line
- Network extension and transmission rates
  up to 100 m at 12 Mbit/s
  up to 1200 m at 9.6 kbit/s per segment.
- Repeaters may be used
- Addressing type: Priority/cycle time assignment of messages by master configuration
- Bus physics: RS-485 according to EIA-485
- Max. number of participants: 126

ETHERCAT

According to IEC/PAS 62407
EtherCAT has been developed as the bus for industry due to increasing requirements with respect to cycle times based on Ethernet. EtherCAT bus is designed for high data transmission rates and fast cycle times.

The EtherCAT bus has the following features:

- Single master system: Master initiates communication Slaves only react to requests
- Topology: Line, star, tree and ring structure following the daisy chain principle
- Network extension and band widths: 100 m between participants, 100 MBit/s
- Addressing type: Address oriented, one datagram for all participants
- Bus physics: Fast Ethernet 100 Base Tx
- Max. number of participants: 65535

GENERAL

The Windows®-based configuration software "Moog Valve Configurator" enables fast and convenient commissioning, diagnosis and configuration of the valve. Data may be uploaded from the PC to the valve; current settings may be downloaded from the valve to the PC. The valve can be controlled via graphic control elements. Status information, set values and actual values as well as characteristic lines, are displayed graphically.
System parameters can be recorded and visualized via an integrated oscilloscope/data logger.

CONFIGURATION SOFTWARE

System requirements:

The configuration software can be configured on a PC with the following minimal requirements:
- IBM-PC compatible with 133 MHz
- Windows® 95/98/ME, Windows® NT/2000/XP
- 64 MB RAM
- 40 MB free hard disc capacity
- Monitor 640x480 Pixel resolution
- Keyboard, mouse

Recommended specification:

- IBM-PC compatible with 300 MHz
- Windows® NT/2000/XP

To use the software, the following options are additionally required: (see also accessories list, page 19)

- Free USB-Port
- USB commissioning module
- configuration / commissioning cable
- Valve connection cable (11+PE)
- Adapter M8 service socket
  (not required for Field Bus CANOpen)
- Power supply 24 V DC / > 0.5 A

Note:
Configuration / commissioning using the "Moog valve configuration software" is performed using the Field Bus socket (Field Bus CANOpen), otherwise (Field Bus Profibus DP, EtherCAT or analog control) using the integrated M8 service socket.
The software will be provided by Moog on request at no charge.

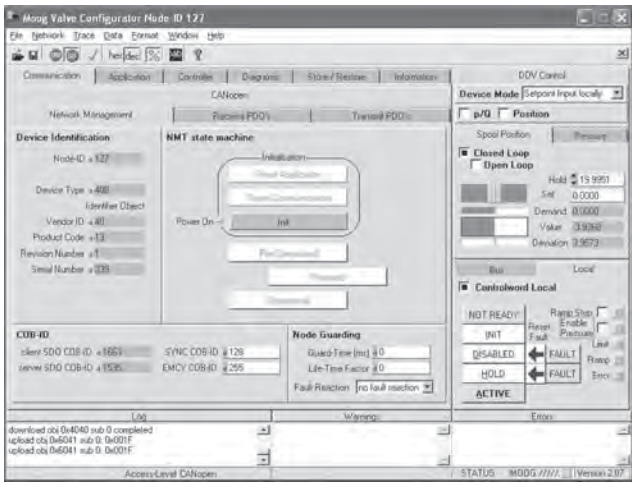

PERFORMANCE SPECIFICATIONS FOR STANDARD MODELS

Valve construction type	Spool version, two-stage
Mounting pattern	according to ISO 4401-05-05-0-05, additional with 2nd tank port
ø of the ports	11,5 mm (0.45 in)
Valve configuration	2-way, 3-way, 4-way, 5-way and 2x2-way operation
Pilot stage	ServoJet®
Pilot oil supply	Optional external or internal (see page 5)
Rated flow Q_N	8 / 30 / 60 / 80 / 2x80 l/min (depending on model),[2.08 / 7.8 / 15.6 / 20.8 / 2x20.8 gals/min] ±10% at Δp_N = 5 bar per control edge
Max. flow	180 l/min (46.8 gals/min)
Max. leakage flow Q_L 1)	3.5 l/min total maximum [0.91 gals/min] 1.7 l/min (pilot stage only) [0.44 gals/min]
Step response time for 0 bis 100% stroke	33 ms (typical)
Hysteresis 1) 2)	< 0.05 % (typical) max. 0.10 % (Q function)
Null shift	< 1.5 % at ΔT = 55 K (Q function)
Linearity of pressure control	< 0,5 %

1) Control / operating pressure p_x = 210 bar (3000.9 psi), oil viscosity ν= 32 mm²/s (1.26 in²/s) and an oil temperature of 40° C (104 °F).
2) Hysteresis of p function dependent on controller optimization

OPERATING CONDITIONS

Max. operating pressure range Main stage Port P, A, B Port T with Y internal Port T with Y external Pilot stage: Serial design With integrated pre reduction stage (on request)	 [bar] 350 (depending on pressure transducer) (5001.5 psi) [bar] 210 (3000.9 psi) [bar] 250 (3572.5 psi) [bar] 280 (4002.2 psi) [bar] 350 (5001.5 psi)
Permissible ambient temperature Ambient temperature Vibration protection Shock protection	 -20 °C to +60 °C (-4 °F to +140 °F) 30 g, 3 axis, 10 Hz to 2 kHz 50 g, 6 directions
Sealing	NBR, FPM, other on request
Hydraulic fluid Permissible fluids Permissible temperature	Hydraulic oil based on mineral oil according to DIN 51524, parts 1-3, others on request -20 °C to +80 °C (-4 °F to +176 °F)
Viscosity ν Recommended Permissible	 15 to 45 mm²/s (0.6 to 1.77 in²/s) 5 to 400 mm²/s (0.19 to 15.7 in²/s)
Clean class, recommended for Functional safety Endurance (wear)	 ISO 4406 < 19/16/13 ISO 4406 < 17/14/11
Dust protection cover	Shipped with oil tight dust protection cover
Installation options	in all orientations, observe venting of pressure transducer
Protection class according to DIN EN60529	IP 65 (with mounted plugs)
Storage temperature	-20 °C to + 80 °C (-4 °F to +176 °F)

Typical characteristic curves for step response and frequency response at a pilot pressure p_x = 210 bar (3,000.9 psi), oil viscosity ν= 32 mm^2/s (1.26 in^2/s) and oil temperature of 40 °C (104 °F).

STEP RESOPONSE

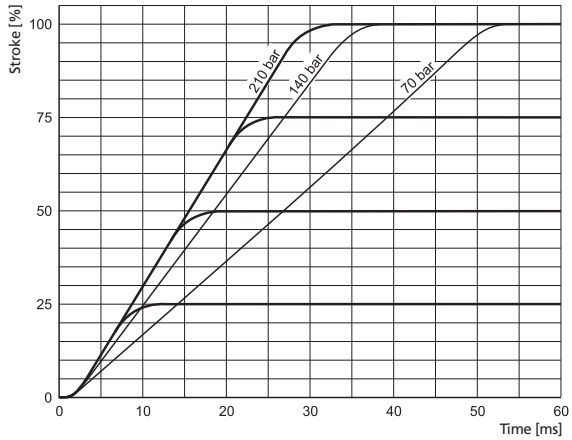

FREQUENCY RESPONSE

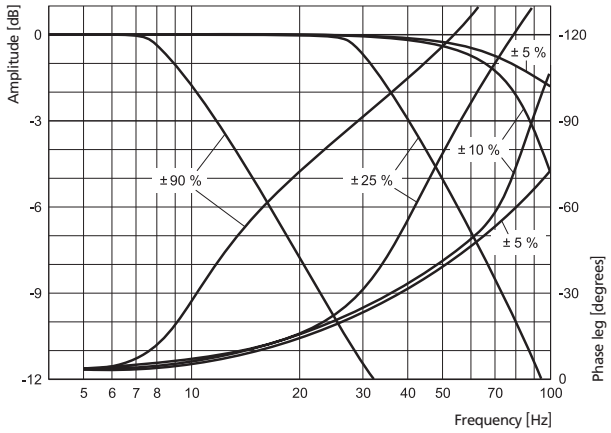

VOLUME FLOW SIGNAL CURVE

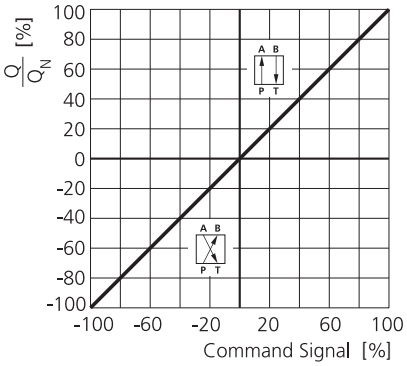

PRESSURE SIGNAL CURVE (PRESSURE CONTROLLED VALVE)

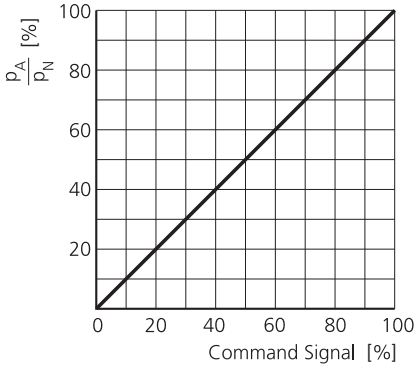

Note: The pressure control electronics must be adapted to the load for each new application. Moog will provide support on request.

INSTALLATION DRAWING

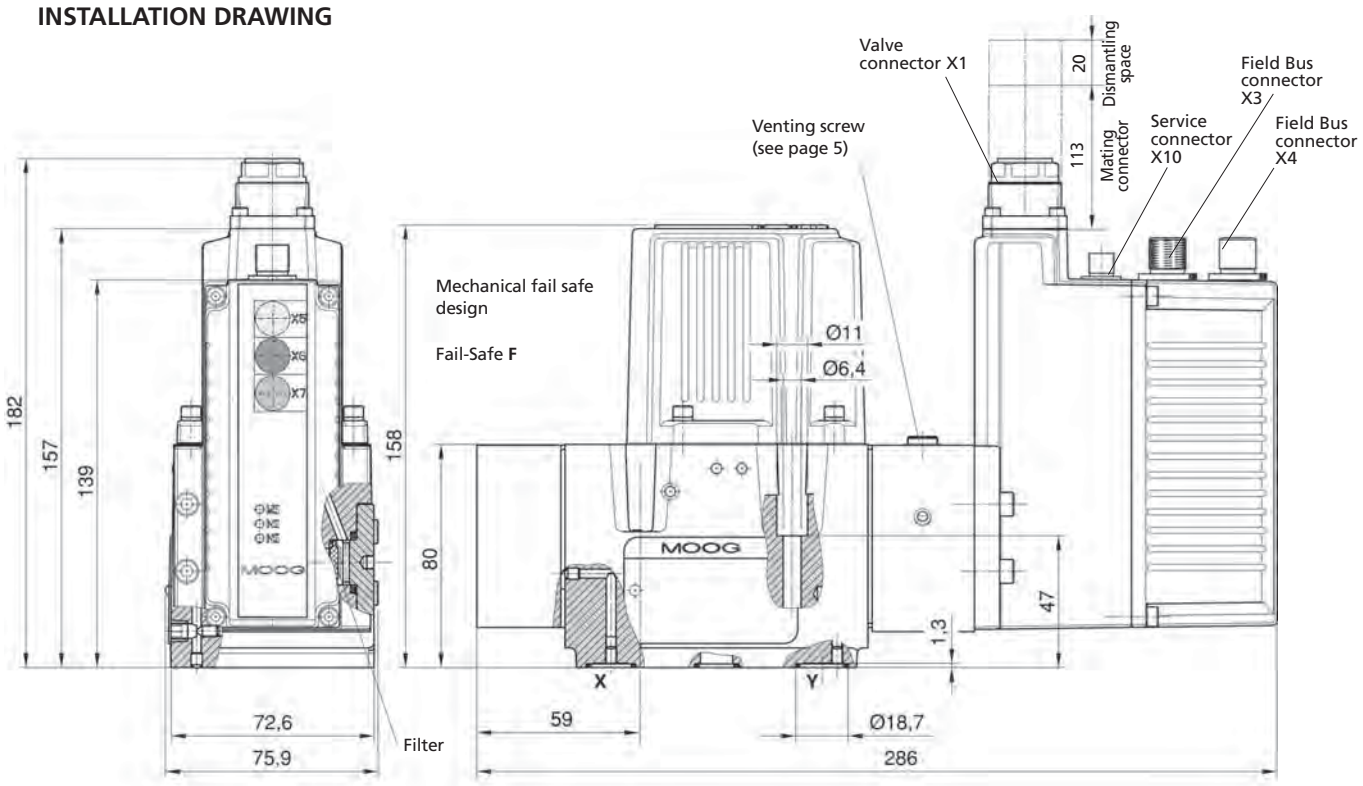

Mechanical fail safe design

Fail-Safe **M/D**

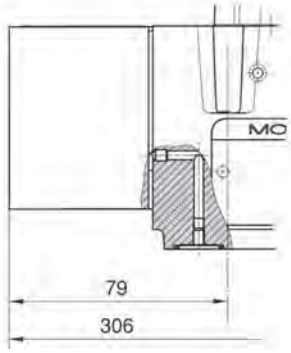

MOUNTING PATTERN OF THE MOUNTING FACE ACCORDING TO ISO 4401-05-05-0-05

Attention:

Observe mounting dist. min. 100 mm (3.93 in) due to O-ring dimensions X and Y.

For valves in 4-way design with $Q_N > 60$ l/min (15.6 gals/min) and 2x2 way design the second tank port T1 is required. For the 5-way design P- and T-ports are interchanged, that means T becomes P, T_1 becomes P1 and P becomes T.

X and Y have to be external.

For a maximum flow, the connector ports for P, T, T_1, A and B must be Ø11.5 mm (0.45 in), different to the standard. Flatness of mounting face <0.01 mm (0.0004 in) per 100 mm (3.9 in), average roughness Ra better than 0.8 µm.

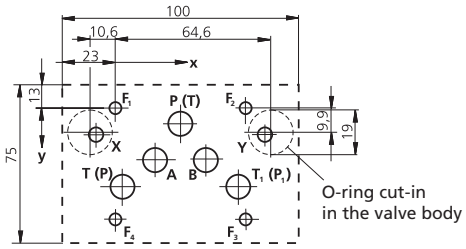

	P	A	B	T	T_1	X	Y	F_1	F_2	F_3	F_4
	Ø11,5	Ø11,5	Ø11,5	Ø11,5	Ø11,5	Ø6,3	Ø6,3	M6	M6	M6	M6
x	27	16,7	37,3	3,2	50,8	-8	62	0	54	54	0
y	6,3	21,4	21,4	32,5	32,5	11	11	0	0	46	46

INSTALLATION DRAWING FOR VALVES WITH CAN-FIELD BUS CONNECTOR [1] [2]

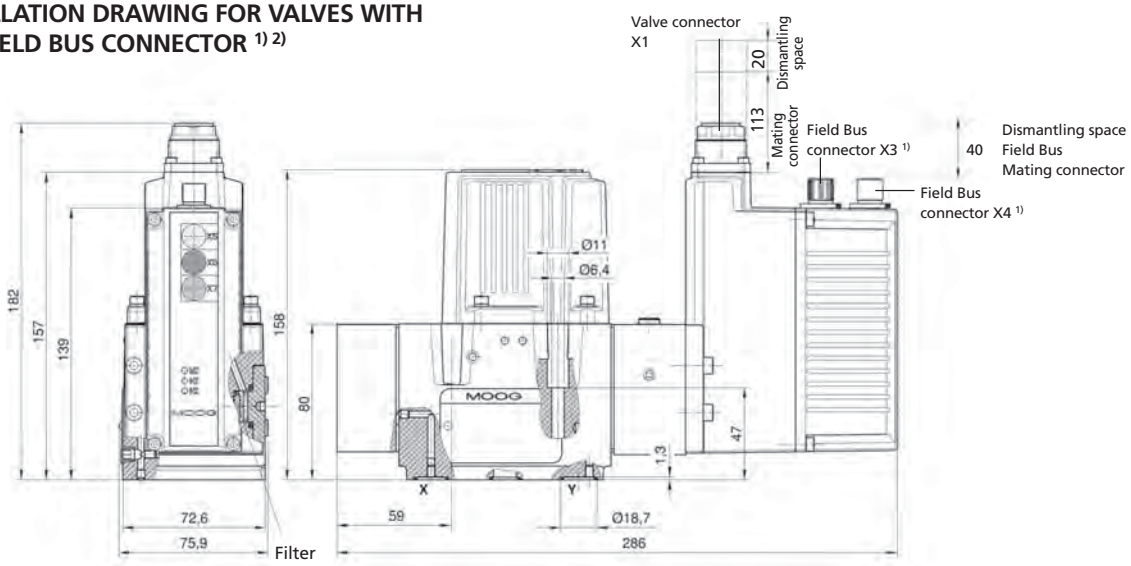

INSTALLATION DRAWING FOR VALVES WITH PROFIBUS-DP OR ETHERCAT-FIELD BUS-SOCKET [2]

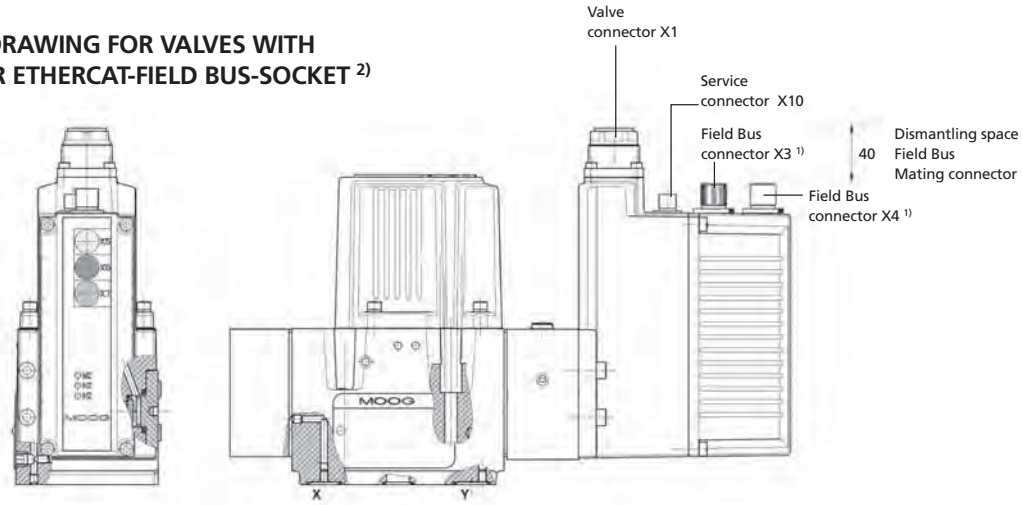

INSTALLATION DRAWING FOR VALVES WITH ANALOG CONTROL [2]

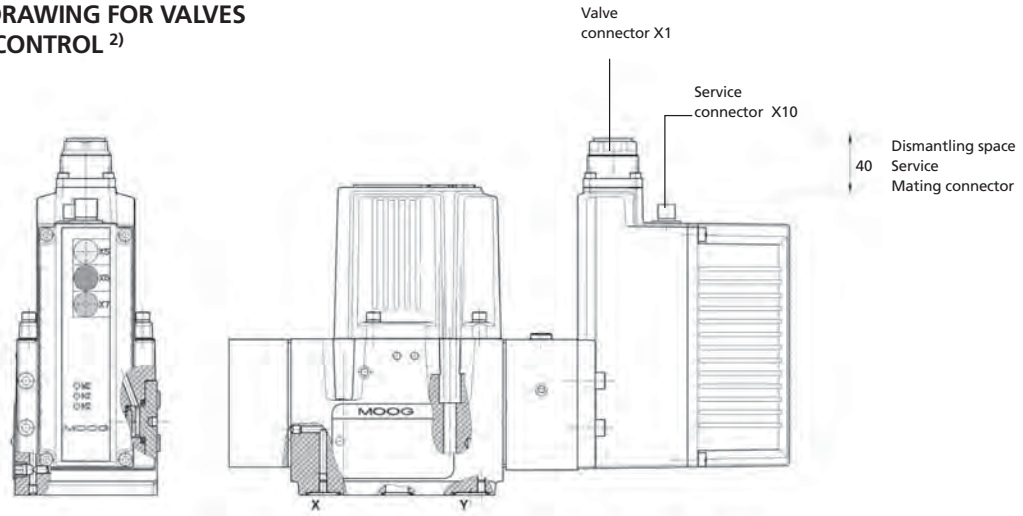

[1] Standard details see page 9
[2] Length dimensions for the mechanical fail-safe design Failsafe F

VALVES FOR APPLICATIONS WITH SAFETY REQUIREMENTS (FAIL-SAFE)

For applications with pQ-proportional valves where certain safety regulations are applicable, a safe metering spool position is needed in order to avoid potential damage. Therefore, a fail-safe version is offered as an option for the multi-stage proportional valves. After switching off the 24 V supply to the safety solenoid valve, this fail-safe function gives a safe metering spool position: overlapped centered position or fully opened A ➡ T or B ➡ T.
In order to move the spool to the safe central position with D941 Series fail-safe valves, the two control chambers of the main stage are hydraulically short circuited via a 2/2-way solenoid valve. The spring force moves the spool into the fail-safe position.

With fail-safe valves, it is possible to check whether the main spool is in a safe position. If the main spool is within the defined safe range, the logic output signal at pin 11 is > + 8.5 V. If this signal is < + 6.5 V, then the main spool is outside the safe range.

This logic signal may be delayed up to 500 ms. To reduce the fail-safe switching time, it is advisable to switch off the supply of the 2/2 way valve and the enable signal at the same time.

NOTE:

According to DIN-EN 954-1, a higher safety category can be achieved if a fail-safe valve is used.

In this connection attention should be paid to appropriate machine safety standards.

ELECTRIC CHARACTERISTICS

2/2-way solenoid valve for the fail-safe version. For more information on fail-safe versions, see Moog Application Note Signal reference value wiring AM 423.

Valve construction type	2/2 way valve
Function	electro magnetic
Nominal voltage U_N	24 V DC (min. 22.8 V DC, max. 26.4 V DC)
Nominal power P_N	26 W

Connector wiring

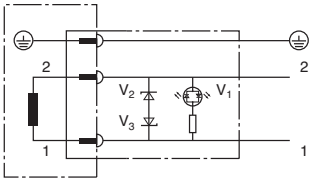

DIN EN 175301 Part 803
with free wheel and light diode

WIRING FOR VALVES WITH 11+PE-POLE CONNECTOR WITH INTEGRATED FAIL-SAFE SUPPLY

To EN 175201 part 804, mating connector (metal) with leading protective ground connection (⏚).

Pin	Signal / Pin	Voltage floating ±10 V, 0 to 10 V	Current floating ±10 mA, 0 to 10 mA, 4 to 20 mA[1]
1	Supply, 2/2 way valve	24 V DC (min. 22,8 V DC, max 26,4 V DC, max 1,20 A)	
2	Supply, 2/2 way valve	⊥ (0 V)	
3	Enable input	8.5 to 32 V DC above GND: operation of the valve enabled <6.5 V DC above GND: Valve fail-safe condition	
4	Command value input Q-function	$U_{in} = U_{4-5}$ R_{in} = 20 kΩ	$I_{in} = I_4 = -I_5$ (for I_7=0) [2] R_{in} = 200 Ω
5	Reference point Command inputs	Reference to ground for pin 4 and 7	common feedback for pin 4 and 7
6	Output Actual valve spool position	I_{out} = 4 to 20 mA referenced to GND (I_{out} proportional to the position of the spool; the output is short circuit protected; for conversion of actual value output signal I_{out} see page 7); R_L = 0 to 500 Ω	
7	Command value input p-function	$U_{in} = U_{7-5}$ R_{in} = 20 kΩ	$I_{in} = I_7 = -I_5$ (for I_4=0) [2] R_{in} = 200 Ω
8	Output Actual pressure	I_{out} = 4 to 20 mA referenced to GND (I_{out} is proportional to pressure in port A; the output is short circuit protected; for conversion of actual value signal I_{out} see page 7); R_L = 0 to 500 Ω	
9	Supply voltage	24 V DC (18 to 32 V DC) above GND	
10	Power ground	GND	
11	digital output	Error monitoring [3]	
⏚	Protective conductor contact		

The potential difference between pins 4, 5 and 7 (measured against pin 10) must be between –15 and +32 V.

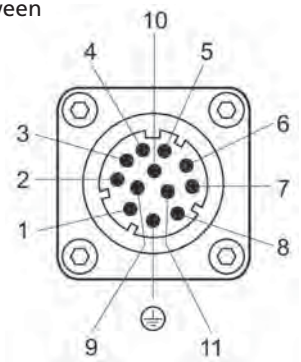

1) Command value signals I_{in}< 3 mA (due to, e.g. wire break) mean an error condition for signals 4 to 20 mA.
The valve reaction to this defect may be customized and activated by the customer.
2) As pin 5 is the common feedback for pin 4 and pin 7, $-I_5 = I_4 + I_7$ applies.
3) Output may be factory programmed, "low" means error (e.g. spool is no longer in a safe position. description see page 16).

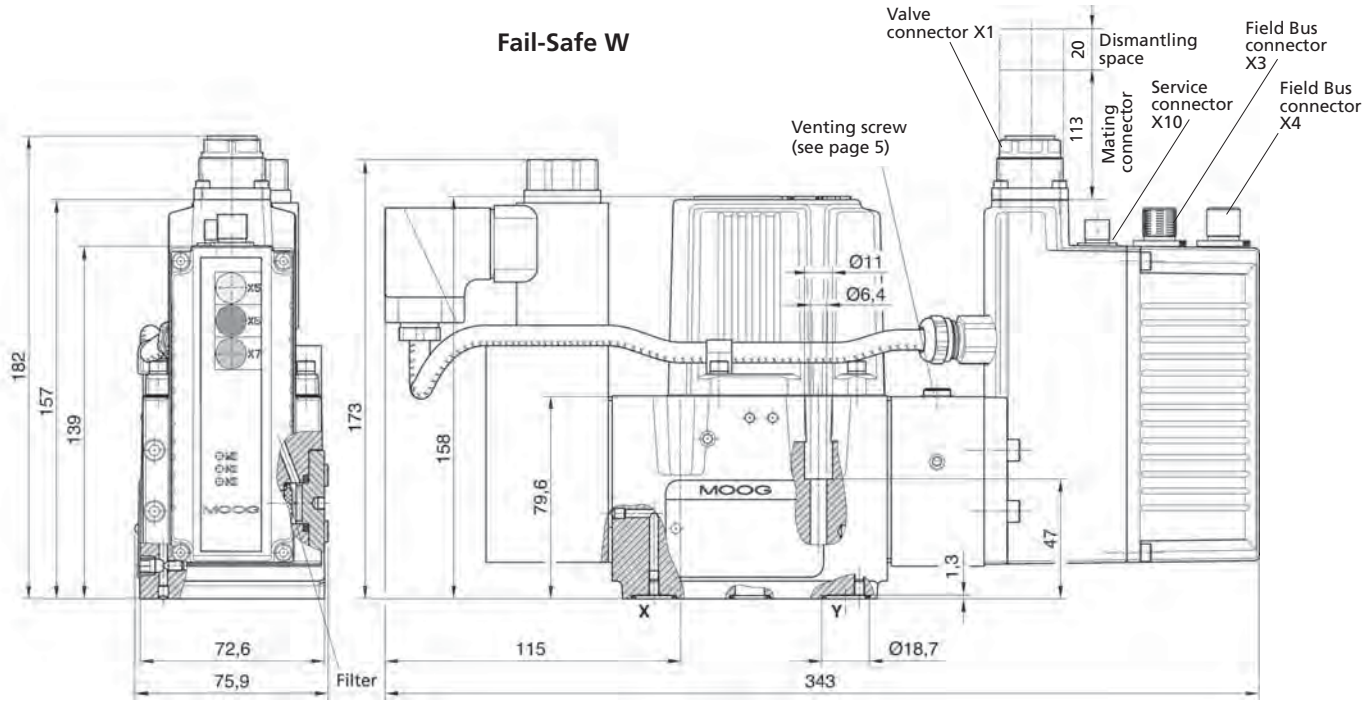

For space requirements of mating connector for various field bus systems see page 15.
The mounting face must conform to ISO 4401-05-05-0-05 (see page 14).

Fail-Safe design W

Design with
2/2 way valve
and spring centering

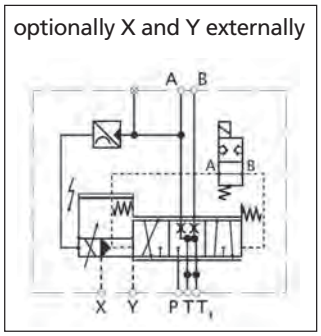

SPARE PARTS AND ACCESSORIES

Part designation	Quantity	Comments	Part number
Sealing service kit (contains all O-rings for ports to mounting face and for filter exchange)	1 1	NBR 85 Shore FPM 85 Shore (Not included in delivery)	B97215-N661F10 B97215-V661F10
- O-rings for ports P, T, T_1, A, B	5	ID 12.4 x Ø 1.8: NBR 85 Shore (0.48 in x 0.07 in) FPM 85 Shore	-45122-004 -42082-004
- O-ring for ports X, Y	2	ID 15.6 x Ø 1.8: NBR 85 Shore (0.61 in x 0.07 in) FPM 85 Shore	-45122-011 -42082-011
- O-rings for filter exchange **for filter**	1	ID 12 x Ø 2.0: NBR 85 Shore (0.47 in x 0.07 in) FPM 85 Shore	-66117-012-020 A25163-012-020
for filter cap	1	ID 17.1 x Ø 2.6: HNBR85 Shore (0.67 in x 0.1 in) FPM 85 Shore	B97009-080 -42082-050
Exchangeable fitler element	1		A67999-200
Mounting screws for proportional valve	4	M 6 x 60 DIN EN ISO 4762, grade 10.9, Tightening torque 11 Nm (not included in delivery)	A03665-060-060
Flushing plate for P, A, B, T, T_1, X, Y **Flushing plate for P, T, T_1, X, Y** **Flushing plate for P, T, T_1 and X, Y**	1 1 1	(Not included in delivery)	B67728-001 B67728-002 B67728-003
Connecting plates		On request	
Dust protection cover	1		A40508
Dust protection cover for Field Bus mounting socket **- with external thread** **- with internal thread**	1 1	Required for operation without mating connector (IP protection) (not included in delivery)	C55823-001 CA24141-001
Mating connector for 11+PE pole mounted connector, IP65 (metal)	1	EN 175201-804 with min. Ø 11 mm (0.43 in), max. Ø 13 mm (0.51 in) (Not included in delivery)	B97067-111
11+PE-cable (3 m)	1	(Not included in delivery)	C21031-003-001
Configuration/commissioning cable	1	On request	
USB commissioning module	1	(Not included in delivery)	C43094-001
Configuration/commissioning cable	1	(Not included in delivery)	TD3999-137
Adapter M8 service socket	1	Additionally, configuration/commissioning cable TD3999-137 is required (Not included in delivery)	CA40934-001
Power supply 10A	1	(Not included in delivery)	D137-003-001
Power cable (2m)	1	(Not included in delivery)	B95924-002
Operating instructions D941 Series	1	(Not included in delivery)	C43357-002

ORDERING INFORMATION

Model number (assigned at the factory)

D941	.	. . . .	.	-	. . . .

Type signation

1	2	3	4	5
.	. .	.	.	.

Specification status

–	Series specification
Z	Special specification

Model designation

Factory identification

Variant

1	**Valve version**
Q	Standard spool

2	**Rated flow**	
	Q_N (l/min)	[gals/min] for Δp_N = 5 bar (71.45 psi) per spool land
08	8	[2.08]
30	30	[7.8]
60	60	[15.6]
80	80	[20.8]

3	**Pressure range in bar [psi]**	
	Max. operating pressure	
W	25	[357.25]
V	100	[1429.0]
U	160	[2286.4]
T	250	[3575.2]
K	350	[5001.5]
	Calibrated pressure may differ from max. operating pressure	

4	**Pilot bushing/spool design**	
B	3-way:	P➡A, A➡T; ~zero lap, linear curve
U	5-way:	P_1➡A, P_2➡B; A➡T; ~zero lap, broken curve
T	4-way:	linear curve P ➡A and P ➡B: 20 % positive lap A➡T and B ➡T: 15 % negative lap
Z	2x2-way:	A➡T, B ➡T_1; linear curve, closed for a 90% signal (only for bypass)
X	Special spool on request	

5	**Pilot stage design**		
	Design	Control volume flow (l/min) [gals/min] for p_x = 140 bar (2000.6 psi)	
A	ServoJet®	1,30	[0.34]

Options may increase price.
All combinations may not be available.
Preferred configurations are highlighted.

ORDERING INFORMATION

6	7	8	9	10	11	12	13	14	15	16
.	.	.	.	.	.	.	.	.	. .	. .

16 Valve functionality

B1	p-functionality
C1	p/Q-functionality

15 Service connector X10

O1	without [4]
K1	with [5]

14 Field bus connector X3, X4

C	CAN
D	Profibus DP [3]
E	EtherCAT [3]
O	without [3]

13 Release function

A	Without release signal, the spool moves to a selected controlled zero position.
B	Without release signal, the control spool moves to a defined final position
L	Without release signal, the control spool moves to a defined final position A ➡ T or B ➡ T with spool position monitoring

12 Valve design

N	Flow modulation with max. pressure limitation [1]
K	Flow modulation with min. pressure limitation [1]
C	Bypass valve, Flow modulation with max. pressure limitation [1]
M	Pressure control in the main line [2]

11 Supply voltage

2	24 V DC (18 to 32 V DC)

10 Signals for flow Q and pressure p

	Input signal Q	Input signal p
M	± 10 V	0 to +10 V
X	± 10 mA	0 to +10 mA
E	4 to 20 mA	4 to 20 mA
9	Field Bus digital [6]	

Actual value output
Spool position / pressure 4 to 20 mA

9 Valve connector X1

E	11+PE-pole EN 175201 part 804

8 Seal material

H	NBR
V	FPM
	others on request

7 Control type and control pressure

	Inlet X	Outlet Y
4	internal	internal
5	external	internal
6	external	external
7	internal	external

6 Spool position without electric supply

Mechanical Fail-Safe design

	Position	p_P (bar) [psi]	p_x extern (bar) [psi]
F	defined final pos. A➡T	independent	
D	defined final pos. P➡A	independent	
M	defined central pos.	≥ 25 [357.25]	< 1 [14.29]
	undefined	≥ 25 [357.25]	≥ 25 [357.25]

Electrically operated Fail-Safe design

	Position	p_P (bar) [psi]	p_x	WV*	VEL**
W	defined central pos.	≥ 25 [357.25]	≥ 25 [357.25]	off	on/off
	defined central pos.	≥ 25 [357.25]	< 1 [14.29]	on/off	on/off
X	others on request				

WV* = 2/2-way seat valve / VEL** = valve electronics

1) Only in combination with "C1" valve functionality

2) Only in combination with "B1" valve functionality

3) Valve parameterization with commissioning software "MOOG VALVE CONFIGURATOR" using M8 service plug

4) Only in combination with Field Bus connector "C"

5) Only in combination with Field Bus connector "D, E, O"

6) Only in combination with Field Bus connector "C, D, E" (may be switched to analogue signals "M, X, E")

GLOBAL SUPPORT

As a recognized leader in motion control technologies, Moog offers a full range of services to support our products and ensure that they meet the expectations of customers. Moog experts are the best at helping customers select the right products and ensuring that they run reliably for a long time.

When it is time for new machine commissioning, refurbishment or routine maintenance, our engineers can help to optimize machine performance, minimize downtime and ensure the smooth application of our products.

Known for the ability to customize products for the unique needs of our customers, we are uniquely able to handle customer needs and supply services throughout the life cycle of the product. **Moog Authentic Repair®** is designed to provide the highest quality repair services using original equipment parts, the latest design specifications, and highly trained technicians. This ensures that our repaired products will run as well as when they were new.

With facilities in over 25 countries, Moog is committed to offering convenient local service to our customers.

Visit www.moog.com/industrial/globallocator to find the location nearest you for application engineering, repair, or field services.

FOR MORE INFORMATION VISIT
http://www.moog.com/industrial

MOOG.COM/INDUSTRIAL

For the Moog location nearest you, contact moog.com/industrial/globallocator.

Argentina	+54	(0) 11 4326 5916	info.argentina@moog.com
Australia	+61	(0) 3 9561 6044	info.australia@moog.com
Austria	+43	(0) 1 688 1384	info.austria@moog.com
Brazil	+55	(0) 11 5523 8011	info.brazil@moog.com
China	+86	(0) 21 5854 1411	info.china@moog.com
Finland	+358	(0) 9 2517 2730	info.finland@moog.com
France	+33	(0) 1 4560 7000	info.france@moog.com
Germany	+49	(0) 7031 622 0	info.germany@moog.com
Hong Kong	+852	2 635 3200	info.hongkong@moog.com
India	+91	(0) 80 4120 8799	info.india@moog.com
Ireland	+353	(0)21 451 9000	info.ireland@moog.com
Italy	+39	0332 42111	info.italy@moog.com
Japan	+81	(0)463 55 3615	info.japan@moog.com
Korea	+82	(0) 31 764 6711	info.korea@moog.com
Luxembourg	+352	40 46 401	info.luxembourg@moog.com
Netherlands	+31	(0) 252 462 000	info.netherlands@moog.com
Norway	+47	224 32927	info.norway@moog.com
Russia	+7	(8) 31 713 1811	info.russia@moog.com
Singapore	+65	677 36238	info.singapore@moog.com
South Africa	+27	(0) 11 655 7030	info.southafrica@moog.com
Spain	+34	902 133 240	info.spain@moog.com
Sweden	+46	(0) 31 680 060	info.sweden@moog.com
Switzerland	+41	(0) 71 394 5010	info.switzerland@moog.com
United Kingdom	+44	(0) 168 429 6600	info.unitedkingdom@moog.com
USA	+1	716 652 2000	info.usa@moog.com

©2006 Moog Inc.

Moog is a registered trademark of Moog, Inc. and its subsidiaries. All quoted trademarks are the property of Moog, Inc. and its subsidiaries. All rights reserved. .

Specifications may be revised without notice. Comparisons based on internal Moog data.

D941_en_11/2006

WHAT MOVES YOUR WORLD

MOOG

APPENDIX- B:

”FABRICATION, INSTALLATION AND COMMISSIONING OF TEST FACILITY FOR BRIDGE EXPANSION JOINTS AT CSIR - CRRI, NEW DELHI:

PACKAGE-3:

INSTRUMENTATION AND CONTROL SYSTEM FOR THREE TEST RIGS OF BRIDGE EXPANSION JOINT TESTING FACILITY”

MTS®
SENSORS

Temposonics®

Magnetostrictive, Linear-Position Sensors

PRODUCT CATALOG

Industrial Sensors

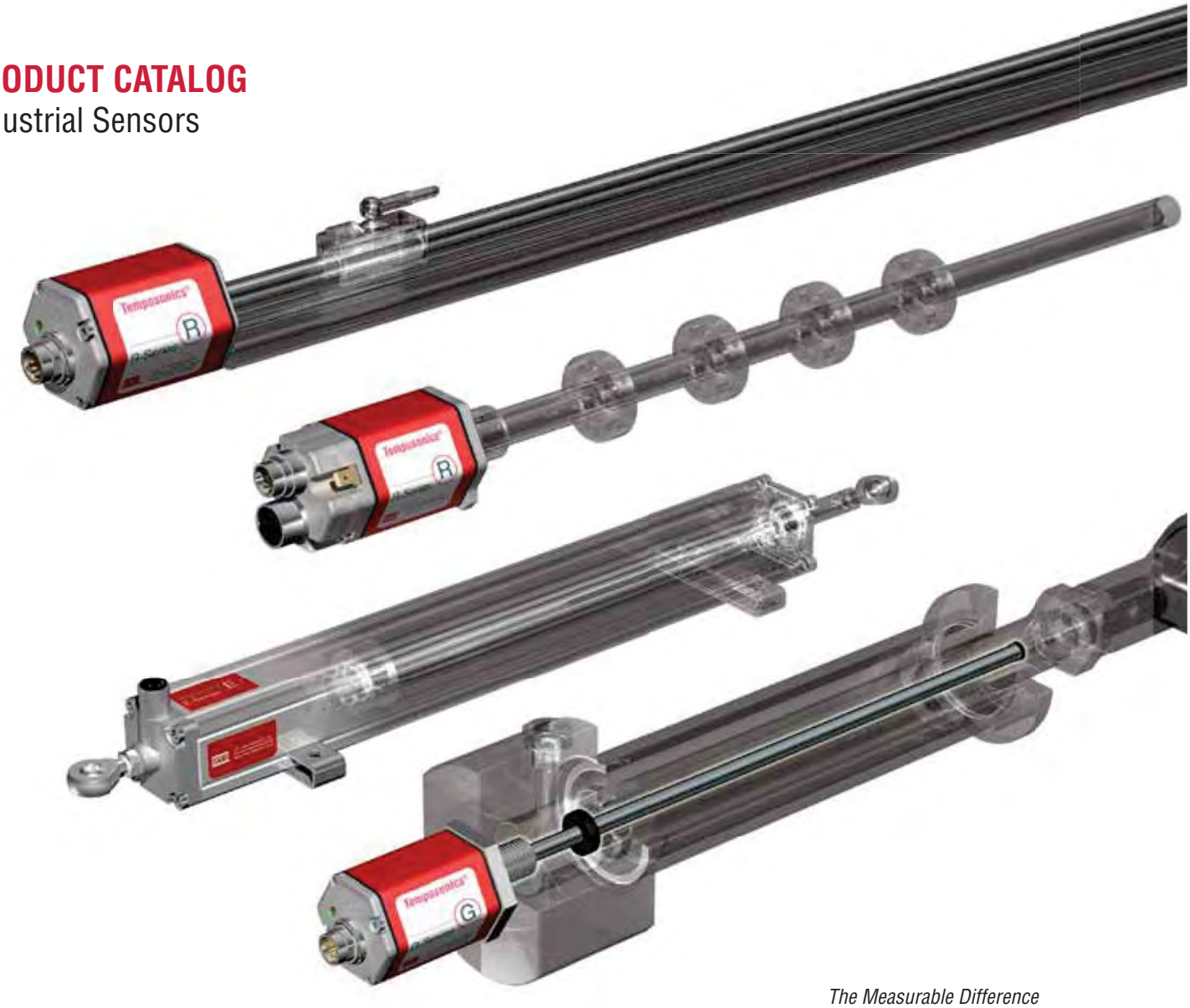

The Measurable Difference

Getting information, help and service

You can get the latest ordering information and software updates by visiting www.mtssensors.com web site General contact information, shipping and office hours are listed below.

GENERAL:

Tel.: +1-919-677-0100
Fax: +1-919-677-2343
E-mail: info.us@mtssensors.com
http://www.mtssensors.com

MAILING AND SHIPPING ADDRESS:

MTS Systems Corporation
Sensors Division
3001 Sheldon Dr.
Cary, North Carolina
27513, USA

CUSTOMER SERVICE:

Tel.: +1-800-633-7609
Fax: +1-800-498-4442
e-mail: orders@mts.com

TECHNICAL SUPPORT AND APPLICATIONS:

24 Hour Emergency Technical Support
Tel: +1-800-633-7609
E-mail: info.us@mtssensors.com

OFFICE HOURS (EST):

Monday - Thursday: 8:00 a.m. to 5:00 p.m.
Friday: 8:00 a.m. to 4:00 p.m.

REMITTANCE ADDRESS:

MTS Systems Corporation
Sensors Division
NW 5872
P.O. Box 1450
Minneapolis, MN
55486-5872

QUOTE AND CONTRACT TERMS & CONDITIONS:

The parties expressly agree that the purchase and use of Material and/or Services from MTS Sensors Division are subject to MTS' Terms and Conditions, in effect as of the date of this document. To view or download the Terms and Conditions that are incorporated by reference into this and any ensuing contract, open your web browser and enter the following URL http://www.mtssensors.com/fileadmin/media/pdfs/Terms_and_Conditions.pdf. Printed Terms and Conditions can be provided upon request by e-mailing us at info.us@mtssensors.com.

REFERENCE INFORMATION

Notices in this Catalog

This manual contains notices to highlight specific information as follows:

Notes:

These notices provide important tips, guidance, or advice.

Important:

These notices provide information that might help you avoid inconvenient or problem situations.

Attention:

These notices indicate possible damage to programs, devices, or data. An attention notice is placed just before the instruction or situation in which damage could occur.

Caution:

These notices indicate situations that can be potentially hazardous to you. A Caution notice is placed just before a description of a potentially hazardous procedure, step, or situation.

Related literature and media

Related support literature and software listed by part number and description below may be referenced within this Industrial Product Catalog. Current literature is provided in Adobe Acrobat Portable Document Format (PDF) and programming software can be downloaded at http://www.mtssensors.com/

Product Data Sheets

(Contains product specifications, features, standard accessories and ordering information)

Quick-start guides

(Contains installation, configuration, operation guidelines)

Document number 551024
G-Series handheld programmer for analog output sensors

Document number 550958
Summit high-pressure housing for R-Series model RH and G-Series model GH sensors

Document number 551084
R-Series cabinet programmer

Document number 551192 & 551193
R-Series Model RH Handheld Address Programmer Accessory

Operating Manuals

Contains Installation, operation and technical reference information.

Document number 550966
G-Series Models GP/GH sensors with analog and digital-pulse outputs

Document number 551152
R-Series models RP/RH sensors with SSI output

Document number 550815
R-Series models RP/RH with Profibus output

This Industrial Product Catalog (Document number 551075)

Contains application overviews, market segments, high-level product features, product specifications, standard accessories and ordering information.

Accessories Catalog (Document number 550929)

Provides a comprehensive list of product accessories, installation, mounting and ordering information for standard and retrofit sensor applications.

Related literature and media (Cont.)

Product Overview

Contains current industrial product offerings with high-level feature and specification overviews

Document number 550937
Industrial Product Overview

Introduction

Contact information i
Reference information ii
Temposonics® technology vi

Markets We Serve

Plastics and rubber manufacturing viii
Woodworking and fluid power ix
Motion simulation, steel manufacturing and metal forming x
Process industries and other applications xi

Product Overview

Linear-position sensor products (High-level overview) xii

R-Series Analog

R-Series Models RP and RH linear-position sensors with Analog Outputs (Voltage/Current)

Features, benefits, applications 1
Product overview 2
Product specifications 2
Output options 3
Enhanced monitoring and diagnostics 3
Advanced communication and programmability 3
Field programming 3
Model RP profile-style sensor dimension references 5
Model RH rod-style sensor dimension references 6
Connections and wiring 7
Sensor ordering information 8

R-Series SSI

R-Series Models RP and RH linear-position sensors with Synchronous Serial Interface (SSI) Output

Features, benefits, applications 11
Product overview 12
Product specifications 12
Output options, SSI interface 13
Measuring modes 13
Advanced output options 14
Enhanced monitoring and diagnostics 15
Advanced communication and programmability 15
Field programming 15
Model RP profile-style sensor dimension references 16
Model RH rod-style sensor dimension references 17
Connections and wiring 18
Sensor ordering information 19

R-Series CANbus

R-Series Models RP and RH linear-position sensors with CANbus Output

Features, benefits, applications 21
Product overview 22
Product specifications 22
Enhanced monitoring and diagnostics 23
CANbus protocol 23

R-Series CANbus (Cont.)

CANopen communication and functionality 23
CANbus outputs 24
Field programming 24
Model RP profile-style sensor dimension references 25
Model RH rod-style sensor dimension references 26
Connections and wiring 27
Sensor ordering information 28

R-Series DeviceNet

R-Series Models RP and RH linear-position sensors with DeviceNet Output

Features, benefits, applications 29
Product overview 30
Product specifications 30
Enhanced monitoring and diagnostics 31
DeviceNet protocol 31
Model RP profile-style sensor dimension references 31
Model RH rod-style sensor dimension references 32
Connections and wiring 33
Cable connector options 34
Sensor ordering information 34

R-Series Profibus-DP

R-Series Models RP and RH linear-position sensors with Profibus-DP Output

Features, benefits, applications 35
Product overview 36
Product specifications 36
Enhanced monitoring and diagnostics 37
Profibus-DP Output parameters 37
Profibus-DP communication and functionality 37
Field programming 38
Model RP profile-style sensor dimension references 38
Model RH rod-style sensor dimension references 39
Connections and wiring 41
Sensor ordering information 43

R-Series EtherCAT®

R-Series Models RP and RH linear-position sensors with EtherCAT® Interface

Features, benefits, applications 45
Product overview 46
Product specifications 46
Enhanced monitoring and diagnostics 47
EtherCAT interface 47
Operation modes and output 47
Model RP profile-style sensor dimension references 48
Model RH rod-style sensor dimension references 49
Connections and wiring 50
Sensor ordering information 51

R-Series EtherNet/IP™

R-Series Models RP/RH linear-position sensors with Industrial Ethernet

Features, benefits, applications 53
Product overview 54
Product specifications 54
Enhanced monitoring and diagnostics 55
Operation mode and output 55
Model RP profile-style sensor dimension references 56
Model RH rod-style sensor dimension references 57
Connections and wiring 58
Sensor ordering information 59

R-Series Profinet

R-Series Models RP/RH linear-position sensors with Profinet interface

Features, benefits, applications 61
Product overview 62
Product specifications 62
Enhanced monitoring and diagnostics 63
Operation modes and output 63
Model RP profile-style sensor dimension references 64
Model RH rod-style sensor dimension references 65
Connections and wiring 66
Sensor ordering information 67

R-Series RD4

R-Series Model RD4 linear-position sensor with direct position and velocity outputs

Features, benefits, applications 69
Product overview 70
Product specifications 70
Model RD4 rod-style M or T sensor dimension references ... 71
Model RD4 rod-style C or D sensor dimension references .. 71
Model RD4 rod-style S sensor dimension references 72
Model RD4 rod-style sensor cylinder install styles M & T 73
Model RD4 rod-style sensor cylinder install styles C & D 73
Model RD4 rod-style sensor style S w/pressure fit rod 74
Model RD4 rod-style sensor cylinder install style S 74
Sensor ordering information 75

R-Series RF Flex

R-Series Model RF - Flex housing for linear-position sensors

Features, benefits, applications 77
Product overview 78
Product specifications 78
Model RF rod-style sensor dimension references 79
Model RF rod-style sensor mounting references 80
Pressure pipe and flange selections 81
Pressure pipe and flange Ordering information 83
Sensor ordering information 83

R-Series RS (IP68/IP69K SSH)

R-Series Model RS linear-position sensor with IP68/IP69K super-shield housing

Features, benefits, applications 85
Product overview 86
Product specifications 86
Model RS rod-style sensor dimension references 87
Cable gland references 88
Sensor ordering information 89

G-Series Analog/Digital pulse

G-Series Models GP/GH linear-position sensor with analog/digital-pulse sensor outputs

Features, benefits, applications 91
Product overview 92
Product specifications 92
Output options 93
Enhanced monitoring and diagnostics 94
Advanced communication and programmability 94
Setup and configuration software 95
Model GP profile-style sensor dimension references 96
Model GH rod-style sensor dimension references 97
Connections and wiring 98
Retrofit connections and wiring (Analog output) 99
Retrofit connections and wiring (Digital output) 99
Sensor ordering information 100

G-Series GT2/GT3 Redundant

G-Series Models GT2/GT3 linear-position redundant sensors

Features, benefits, applications 103
Product overview 104
Product specifications 104
Output options 105
Advanced communication and programmability 105
Setup and configuration software 105
Model GT rod-style sensor dimension references 106
Connections and wiring 107
Sensor ordering information 108

E-Series EH Rod Style

E-Series Models EH rod-style sensor with analog and Start/Stop outputs

Features, benefits, applications 109
Product overview 110
Product specifications 110
Outputs 111
Communication 112
Sensor dimension references 112
Connections and wiring 113
Sensor ordering information 114

E-Series Models EH rod-style sensor with CANopen output

Features, benefits, applications 115
Product overview 116
Product specifications 116

CANopen communication and functionality 117
Dual Magnet Outputs 118
Sensor dimension references 118
Connections and wiring 119
Sensor ordering information 120

E-Series Models EH rod-style sensor with SSI output

Features, benefits, applications 121
Product overview 122
Product specifications 122
Synchronous Serial Interface (SSI) 123
Sensor dimension references 123
Connections and wiring 124
Sensor ordering information 125

E-Series EP/EL

E-Series Models EP/EL profile-style sensors with analog and Start/Stop outputs

Features, benefits, applications 127
Product overview 128
Product specifications 128
Outputs 129
Communication 130
Sensor dimension references 130
Connections and wiring 132
Sensor ordering information 133

E-Series Models EP/EL profile-style sensors with CANopen output

Features, benefits, applications 135
Product overview 136
Product specifications 136
CANopen communication and functionality 137
Dual Magnet Outputs 138
Sensor dimension references 138
Connections and wiring 140
Sensor ordering information 141

E-Series Models EP/EL profile-style sensors with SSI output

Features, benefits, applications 143
Product overview 144
Product specifications 144
Synchronous Serial Interface (SSI) 145
Sensor dimension references 145
Connections and wiring 147
Sensor ordering information 148

E-Series ER Rod and Cylinder

E-Series Models ER rod-and-cylinder sensor with analog and Start/Stop outputs

Features, benefits, applications 149
Product overview 150
Product specifications 150
Output 151
Communication 151
Model ER rod-and-cylinder sensor dimension references .. 152
Connections and wiring 152
Sensor ordering information 153

E-Series EE Embedded Analog

E-Series Model EE sensor with current outputs

Features, benefits, applications 155
Product overview 156
Product specifications 156
Outputs 157
Sensor dimension references 157
Sensor magnet options 158
Connections and wiring 158
Sensor ordering information 160

Industrial Product Accessories

Temposonics® linear-position sensor accessories and ordering information for current production and retrofit options. (Includes mounting, installation and application references)

Mounting & installation reference, Models RH, RF, RD4 ... 162
Mounting & Installation reference, Models GH and GT 163
Mounting & Installation reference, Models RP and GP 164
Mounting & Installation reference, Models EH/EP/EL 165
Mounting & Installation reference, Models ER and EP2 166
Magnet selections 167
Extension cable length limitations 171
Extension cable with 6-pin (D60) connector options 172
Extension cable with connector options, RP/RH-Profibus .. 173
Extension cable with connector options RP/RH-SSI 174
Extension cable with 10-pin connector options 175
Connector and bus cables, Industrial Ethernet 176
Connector and bus cables assemblies (M12) cord sets 177
Adapter cable retrofit options 178
Connectors 182
Connectors (retrofit) legacy sensor models 188
Pressure pipe 189
Installation hardware 190
Sensor programming; tools and kits 194

Summit HPH

Summit High-Pressure Housing (HPH) Option for R-Series Model RH and G-Series Model GH linear-position sensors

Features, benefits, applications 197
Product overview 198
Product specifications 198
HPH dimension reference 199
Design compatibility chart 200
HPH accessories 201
Ordering information 201

Magnetostrictive principle - Technology at its best

Time-Based Magnetostrictive Position Sensing Principle

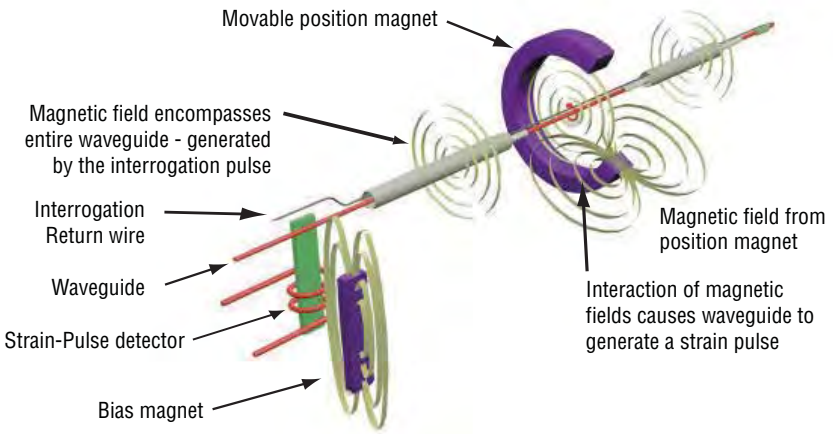

Technology that guarantees precision and reliability

The best linear-position sensors provide absolute position measurement giving higher productivity and greater safety for machine and automation devices. MTS linear-position sensors outperform the competition, deliver accuracy and reliability under the most difficult conditions, providing excellent value for our customers. Our success is a result of more than 35 years of technology leadership, vertically integrated manufacturing processes and unsurpassed levels of customer support.

MTS Sensors was the first to realize the promising advantages for linear-position measurement contained in the magnetostrictive measuring principle developed by J. Tellermann. Tellerman's original design was used to develop Temposonics brand sensors: the first magnetostrictive position sensors, a technology that guarantees precision and reliability without equal.

Magnetostriction - what it is and how it works

The heart of MTS sensors is the ferromagnetic measuring element, also known as the waveguide, and a movable position magnet that generates a direct-axis magnetic field in the waveguide. When a current or interrogation pulse passes through the waveguide, a second magnetic field is created radially around the waveguide.

The interaction between the magnetic field in the waveguide and the magnetic field produced by the position magnet generates a strain pulse which travels at a constant sonic speed from its point of generation, the measurement point, to the end of the waveguide where it is detected by the sensor electronics.

The position of the magnet is determined with high precision and speed by accurately measuring the time elapsed between the application of the interrogation pulse and the arrival of the resulting strain pulse with a high speed counter. Using the elapsed time to determine position of the permanent magnet provides an absolute position reading that never needs recalibration or re-homing after a power loss. Non-contact sensing eliminates wear, and guarantees the best durability and output repeatability.

With our extensive know-how of ferromagnetic materials, magnetic effects and time-based measurement processes, MTS remains unrivaled in performance standards for non-contacting position measurement of the highest precision.

MTS Temposonics® linear-position sensors

Technology Positioned for Cost-Effective, Accurate, Reliable Performance in Industrial Machine Control Applications

R-Series sensors

Rod and Profile-style sensors

G-Series sensors

Rod and Profile-style sensors

Flexible mounting options

Including external machine mounting or in-cylinder installations (hydraulic & pneumatic)

E-Series sensors

Economical profile and rod-and-cylinder style sensors

Whether you call them position transducers, linear-displacement sensors, distance or linear-position sensors, MTS Sensors provides the most reliable and accurate magnetostrictive position sensors in the world. Temposonics sensors are ideal for monitoring and measurement systems, for machine control involving hydraulic, pneumatic, electromechanical or even manual positioning in industrial or commercial applications.

Temposonics® linear-position sensors out perform, out measure and out last the competition

MTS Sensors enable applications to work smarter and harder. Our full line of standard and custom linear-position sensors can fit virtually every type of industrial and commercial application imaginable.

Temposonics® linear-position sensors provide unmatched flexibility

With a variety of mounting, output and configuration options and can be easily installed in a cylinder or externally mounted to your machine.

Temposonics sensors are a cost-effective, high-performance, high-quality alternative to linear pots or linear encoders. When you add affordable cost to reliable, repeatable performance and zero maintenance , the choice is obvious, Temposonics.

Temposonics® Technology

Superior Performance

High performance machines require high performance sensing solutions, and Temposonics technology has been the leader in precision magnetostrictive-based linear position sensing for more than 35 years.

Continuous investment in research and development has enabled MTS to produce the world's highest resolution magnetostrictive sensors, with the fastest update rates for high speed motion control, the tightest non-linearity specifications, and the latest in high performance fieldbus compatible outputs.

The wide range of Temposonics high performance sensors allow you to design, manufacture, and deliver the world's most productive manufacturing machines, and for your customers to deliver high quality and cost optimized products. In a globally competitive environment, superior performance enables high quality, high productivity solutions. Don't settle for less, choose MTS Temposonics Technology!

Plastics & Rubber Manufacturing

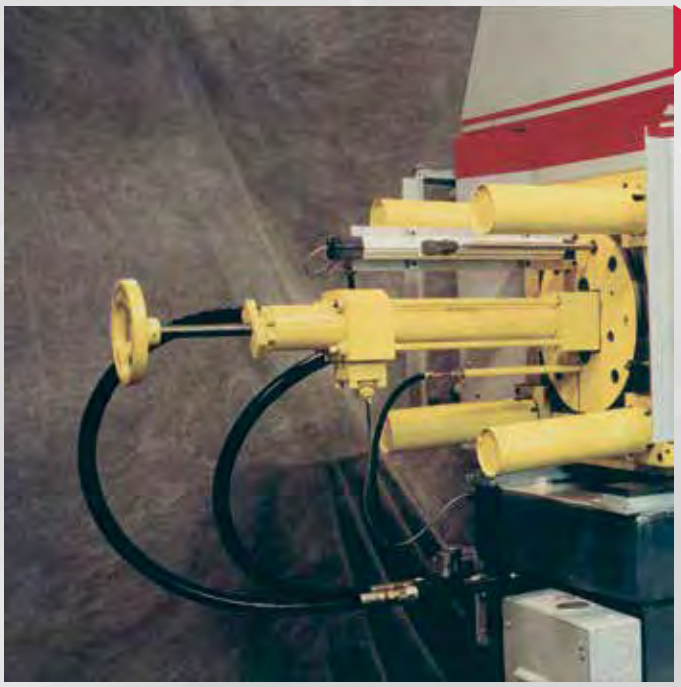

Higher Performance, Lower Cost

The world's highest performance injection molding machines, blow molding machines, tire presses, and extrusion filtration systems utilize Temposonics technology to deliver high speed, high quality results. High speed industrial networks combined with precision Temposonics sensors, help these machines produce highly precise products while delivering world-class productivity. Multi-position sensing optimizes costs by controlling two or more motion axes with a single sensor. Resolutions to 0.5 µm enable precision clamp and mold positioning. Legendary Temposonics reliability means that your machine is up and running. High quality and world class productivity – Temposonics Technology delivers.

Primary & Secondary Woodworking

Optimizing Productivity

MTS Temposonics sensors are designed and built to withstand the rigors of sawmill applications and have been that industry's standard for more than 35 years. Recent advances in high speed serial interfaces, enhanced shock and vibration resistance, and the availability of a precision velocity signal (simultaneous with position signal) have enabled new machine control algorithms that increase speed and improve yields. This adds up to increasing productivity and more profitable mill operations. MTS has led the way for more than 35 years, and our newest generation of sensors carries the tradition forward.

Fluid Power; Hydraulic & Pneumatic Cylinders

Operational Efficiency Plus High Performance

High performance, durability and value have made MTS' Temposonics sensor technology the standard for in-cylinder applications in the hydraulics industry for more than 35 years. In addition to superior features like linearity compensation, resistance to shock and vibration and EMI immunity, our innovative modular design allows for easy replacement of the sensing element and electronics without breaking the cylinder's high-pressure seal, thus significantly reducing maintenance costs and downtime. This means your machines are up and your operations are running at peak efficiency.

Motion Simulation

Entertainment Industry

For coordination with video display, position feedback of audience seat movement is a growing need in the entertainment industry.

Temposonics sensors deliver:

- Superior response and accuracy; achieves higher simulated motion fidelity
- Replaceable sensing element eliminates the need to drop hydraulic pressure or break hydraulic seal
- Embedded or detached electronics available for short installation envelopes
- Simultaneous position and velocity outputs enable high performance servohydraulic positioning

Steel Manufacturing and Metal Forming

Superior Speed and Accuracy

Our high-speed R-Series SSI position sensors continue to get faster and more accurate making them an ideal choice for a wide range of machine tool applications. Our SSI sensor also comes with a host of housing and installation options such as the NEMA Type 4X housing and high shock and vibration mechanics to improve immunity and operation in the harshest production environments.

- Resolution down to 0.5 µm (0.00002 in.)
- Accuracy as good as ± 10 µm (± 0.0004 in.)
- Cycle times as low as 100 µsec.

Process Industries

Quality Manufacturing

By optimizing machine performance and product flow control, Temposonics sensors offer:

- Superior accuracy with higher consistency between changeovers and reduced setup time
- Precise and repeatable positioning for smoother, more controlled motion
- Improved efficiency, yield, and throughput while maintaining quality

Other Application Examples

MTS Sensors Continue to Provide More Application Solutions

Where ever demanding performance is required, Temposonics sensor's provide the trusted solution. A wide range of industries and automation processes that rely on Temposonics state-of-the-art technology is continuously increasing.

- Assembly automation
- Primary metal production
- Paper and textiles
- Robotics
- Glass cutting
- Food and beverage
- Adhesive dispensing
- Material handling and packaging
- Test & measurement
- Wind turbines
- Medical equipment
- Power generation
- Control systems

MTS® SENSORS

R-SERIES

Smart sensor models for fast, high precision and synchronized position control applications

	Model RH Rod style housing for use in hydraulic/ pneumatic cylinders	Model RP Aluminum extrusion profile housing easily mounts on machine surface	Model RF Flexible rod housing for mounting along an arc or for limited installation space	Model RD4 Rod style housing with detached electronics and mounting block. Ideal for use in clevis mounted cylinders.
OUTPUT	**Voltage:** 0 to 10 Vdc, 10 to 0 Vdc, -10 to +10 Vdc, +10 to -10 Vdc Additional output ranges available between -10 and +10 Vdc			
	Current: 4 to 20 mA, 20 to 4 mA Additional output ranges available between 0 and 20 mA.			
	SSI (Synchronous Serial Interface): Gray or binary format, data length selectable, synchronous / asynchronous measurement, optional parity and error bit.			
	Industrial Ethernet and Fieldbus: CANbus, DeviceNet, Profibus-DP, Profinet RT, EtherCAT® and EtherNet/IP			
MEASURING RANGE	25 to 7,620 mm (1 to 300 in.)	25 to 5,080 mm (1 to 200 in.)	250 to 10,060 mm (10 to 396 in.) Contact factory for longer lengths.	25 to 5,080 mm (1 to 200 in.)
RESOLUTION	**Voltage and Current:** 16 Bit, 0.0015%			
	Digital: SSI; 0.5 µm (0.00002 in.), **Profibus, Profinet, EtherCAT® and EtherNet/IP**; 1 µm (0.00004 in.), **CANbus, DeviceNet**; 2 µm (0.00008 in.).			
FEATURES	**Position + Velocity Measurement (see data sheets)**			
	Simultaneous Multi-Position Measurements: • **Voltage or Current;** 2 positions • **Profibus, CANbus, EtherCAT, EtherNet/IP**; up to 20 positions • **Profinet:** up to 19 positions • **SSI:** 2 magnet differential			
	Handheld programmers and PC programming kits allow adjustment of the measurement stroke length and sensor parameters.			
DIAGNOSTICS	Sensor LEDs indicate sensor status, field bus activity and diagnostics.			

CUSTOM AND SPECIAL FUNCTION SENSORS (REFER TO WWW.MTSSENSORS.COM)

MODEL GB SENSOR

MODEL MH SENSOR

C-SERIES MODELS CS/CM SENSORS

MODEL GT REDUNDANT

C-SERIES WITH H2 HOUSING AND FLOAT OPTIONS

G-SERIES

Backward compatibility and upgraded performance for legacy sensor retrofits

E-SERIES

Economical sensor models for simplistic position feedback applications

	Model GH & GP Rod or profile style housings	Model EE Compact housing for in-cylinder integration	Model EH Compact rod style housing for use in hydraulic / pneumatic cylinders	Model EP Aluminum extrusion profile housing easily mounts on machine surface	Model EL Low height profile housing for lower clearance on machine	Model ER Rod-and-cylinder housing provides versatile mounting options and internal magnet
	Voltage: Ranges between -10 and +10 Vdc		**Voltage:** 0 to 10 Vdc and / or 10 to 0 Vdc			
	Current: Ranges between 0 and 20 mA	**Current:** 4 to 20 mA or 20 to 4 mA				
			SSI (Synchronous Serial Interface): Gray or binary format, data length selectable, asynchronous measurement			
			CANbus			
	Digital Pulse: Start / Stop or PWM		**Digital Pulse:** Start / Stop			
	Voltage and Current: 50 to 2540 mm(2 to 100 in.) **Digital Pulse:** 50 to 5080 mm (2 to 200 in.) Rod style up to 7620 mm (300 in.)	50 to 2500 mm (2 to 100 in.)	50 to 2500 mm (2 to 100 in.) For EP Start/Stop only: 50 to 3000 mm (2 to 120 in.)			50 to 1500 mm (2 to 60 in.)
	Voltage and Current: Infinite (restricted by output ripple)	**Voltage and Current:** Infinite (restricted by output ripple)				
	Digital Pulse: 5 µm, dependent on controller		**Digital Pulse:** 5 µm, dependent on controller **SSI:** 20 µm **CANbus:** 10 µm			
	Position Measurement	**Position Measurement**				
	Simultaneous Multi-Position Measurement for Start / Stop (controller dependent)		**Simultaneous Multi-Position Measurement:** • Voltage or current; 2 positions • Start/Stop (controller dependent)			
			Sensor parameters upload feature for Start/Stop models			
	Change measurement stroke length and output using handheld programmers and PC programming kits					
	Sensor LEDs indicate status and diagnostics					

ACCESSORIES

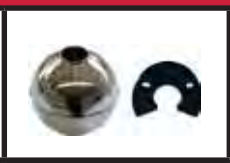

CONNECTORS & CABLES	MAGNETS & FLOATS	PROGRAMMING TOOLS	EXPLOSION-PROOF HOUSING	PROTECTIVE HOUSINGS

Temposonics®

Magnetostrictive, Absolute, Non-contact
Linear-Position Sensors

R-Series Models RP and RH

Analog Outputs (Voltage/Current)

Data Sheet

MTS SENSORS

R-Series Analog

Document Part Number
550992 Revision F

Model RP Profile-style position sensor **Model RH Rod-style position sensor**

FEATURES

- Linear, Absolute Measurement
- LEDs For Sensor Diagnostics
- Non-Contact Sensing Technology
- Linearity Deviation Less Than 0.01%
- Repeatability Within 0.001%
- Direct Analog Outputs (Voltage or Current)
- Single or Dual Channel Outputs (Position + Speed)

BENEFITS

- Rugged Industrial Sensor
- Dual Magnet Position Measurement
- 100% Field Adjustable Null And Span Setpoints

APPLICATIONS

- Continuous Operation In Harsh Industrial Conditions
- High Pressure Conditions
- For Accurate, Dual-Magnet Position Measurement

TYPICAL INDUSTRIES

- Fluid Power
- Factory Automation
- Material Handling and Packaging
- Woodworking, Metalworking and Assembly Tools
- Plastic Injection and Blow Molding

R-Series Models RP and RH Sensors
Product Overview and Specifications

Product overview

R-Series model RH and RP sensors are extremely robust and are ideal for continuous operation under harsh industrial conditions. MTS offers two standard sensor housings, rod and profile extrusion. The rod housing is capable of withstanding high pressures such as those found in hydraulic cylinders. The profile extrusion housing provides convenient mounting options and captive sliding magnets which utilize slide bearings of special material that reduce friction, and help mitigate dirt build up. The sensor head contains the active signal conditioning and a complete integrated electronics interface. Double shielding is used to ensure EMI protection for unsurpassed reliability and operating safety.

Product specifications

Parameters	Specifications
OUTPUT	
Measured output variables:	Position + speed (magnitude) or velocity (with direction) for single or dual magnets
Resolution:	**Position measurement:** 16 bit; 0.0015% (minimum 1 µm) **Speed measurement:** 0.1 mm/s
Linearity deviation:	< ± 0.01% full stroke (minimum ± 50 µm)
Repeatability:	< ± 0.001% full stroke (minimum ± 2.5 µm)
Hysteresis:	< 4 µm
Analog Outputs:	**Voltage:** 0 to 10, 10 to 0, -10 to +10, +10 to -10 Vdc (minimum controller load >5k ohms) **Current:** 4(0) to 20 mA, 20 to 4(0) mA (minimum/maximum load 0/500 ohms)
Stroke lengths:	**Range (Profile style):** 25 to 5080 mm (1 to 200 in.) **Range (Rod style):** 25 to 7620 mm (2 to 300 in.) **Update times:** 0.5 ms up to 1200 mm, 1.0 ms up to 2400 mm, 2.0 ms up to 4800 mm, 5.0 ms up to 7620 mm stroke length
Speed measurement:	**Range:** 0.025 - 10 m/s (1.0 - 400.0 in./s) **Deviation:** <0.5% **Resolution:** 0.1 mm/s (0.004 in./s) **Update times:** Refer to update times in *'stroke lengths'* above
ELECTRONICS	
Operating voltage:	**+24 Vdc nominal:** -15% or +20% * **Polarity protection:** up to -30 Vdc **Over voltage protection:** up to 36 Vdc **Current drain:** 100 mA typical **Dielectric withstand voltage:** 500 Vdc (DC ground to machine ground)
Setpoints:	**Setpoint adjustment (Null/Span):** 100% of electrical stroke length. 25 mm (0.98 in.) min. distance between setpoints. **For dual-magnet outputs:** 76 mm (3 in.) min. distance between magnets

Parameters	Specifications
ENVIRONMENTAL	
Operating conditions:	**Operating temperature:** -40 °C (-40 °F) to +75 °C (+167 °F) **Relative humidity:** 90% no condensation **Temperature coefficient:** < 30 ppm/ °C
EMC test:	**Electromagnetic emission:** IEC/EN 50081-1 **Electromagnetic susceptibility:** IEC/EN 50082-2, IEC/EN 61000-4-2/3/4/6, level 3/4 criterium A, CE qualified
Shock rating:	100 g (single hit)/ IEC standard 68-2-27 (survivability)
Vibration rating:	15 g (30 g with HVR option)/10 to 2000 Hz, IEC standard 68-2-6
WIRING	
Connection type:	6-pin male D60 (M16) connector or integral cable
PROFILE STYLE SENSOR (MODEL RP)	
Electronic head:	Aluminum housing with diagnostic LED display (LEDs located beside connector/cable exit)
Sealing:	IP 65 **
Sensor extrusion:	Aluminum (Temposonics profile style)
Mounting:	Any orientation. Adjustable mounting feet or T-slot nut (M5 threads) in bottom groove
Magnet types:	Captive-sliding magnet or open-ring magnet
ROD STYLE SENSOR (MODEL RH)	
Electronic head:	Aluminum housing with diagnostic LED display (LEDs located beside connector/cable exit)
Sealing:	IP 67 or IP 68 for integral cable models **
Sensor rod:	304L stainless steel
Operating pressure:	350 bar static, 690 bar peak (5000 psi static, 10,000 psi peak)
Mounting:	Any orientation. Threaded flange M18 x 1.5 or 3/4 - 16 UNF-3A
Typical mounting torque:	45 N-m (33 ft. - lbs.)
Magnet types:	Ring magnet, open-ring magnet, or magnet float

* UL Recognition requires an approved power supply with energy limitation (UL 61010-1), or Class 2 rating according to the National Electrical Code (USA) / Canadian Electrical Code.

** The IP rating is not part of the UL Recognition.

Output options

R-Series analog sensors provide single or dual-magnet sensor options along with single or dual-channel outputs *(see 'Figure 1')*.

The R-Series analog sensor can be ordered for single-position magnet applications which provide one position output, and/or one velocity output over the active stroke length.

The R-Series sensor can also be ordered for dual-position magnet applications which provide two position outputs, or two velocity outputs, or one of each.

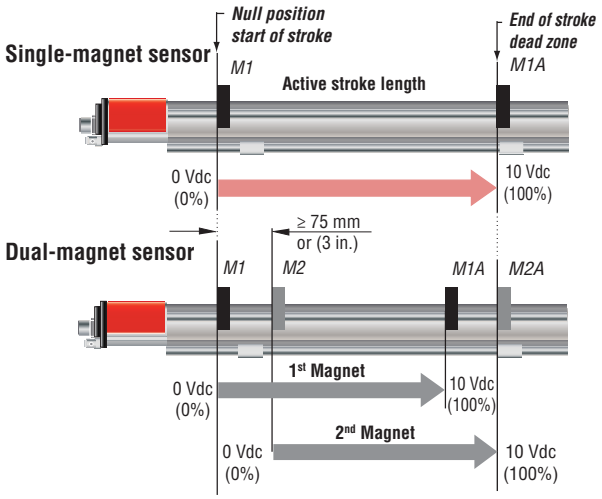

Figure 1. Single and dual-magnet output diagram

When using dual magnets, the minimum allowed distance between the magnets is 75 mm (3 in.) to maintain proper sensor output.

Enhanced monitoring and diagnostics

SENSOR STATUS AND DIAGNOSTIC DISPLAY

Diagnostic LEDs (green/red), located beside the connector or cable exit *(see 'Figure 2')*, provide basic visual monitoring for normal sensor operation and troubleshooting. Diagnostic display LEDs indicate four modes described in *'Table 1'*.

Figure 2. R-Series sensor diagnostic LEDs

Green	Red	Operation status/mode
ON	OFF	Normal function (operation mode)
ON	Flashing	Magnet out of setup range
ON	ON	Magnet not detected or wrong quantity of magnets
Flashing	ON	Programming mode

Table 1. Diagnostic LED codes

Advanced communication and programmability

SENSOR FIELD PROGRAMMING

Temposonics R-Series Analog sensors are pre-configured at the factory by model number designation. For many applications, normal sensor installation and operation does not require additional adjustment. If however, sensor parameter changes are required in the field, the *'R-Series Analog PC Programming Kit, part no. 253309-1' (see 'Figure 3')* can be used to easily program the sensor electronically without opening the sensor's housing.

Field programming to adjust the output values is available for any setting needed, within the selected output range. Each sensor's output range is selected from the available options when ordering a particular sensor model number. There are six different manufacturing build types available, three single channel and three dual channel outputs in various ranges as described below:

Single-channel output for either position or speed:

- Voltage output between 0 and +10 volts
- Voltage output between -10 and +10 volts
- Current output between 0 (or 4) and 20 mA

Dual-channel outputs for position and/or speed:

- Voltage outputs between 0 and +10 volts
- Voltage outputs between -10 and +10 volts
- Current outputs between 0 (or 4) and 20 mA

Field Programming Notes:

Field programming allows for numerous custom sensor configurations, however, please note that field programming can not be used to change the R-Series Analog sensor from one manufacturing build type to another.

Field programming (output voltages):

1. Sensor models ordered with *one output channel* can not be reprogrammed in the field to provide a second output channel.
2. Sensor models ordered with *positive only output voltages* can not be reprogrammed in the field to include negative output voltages.
3. Sensor models ordered with *both positive and negative output voltages* can be reprogrammed in the field for positive only voltages, or negative only voltages. However, resolution is then reduced.

Figure 3. R-Series Analog PC Programming Kit, Part no. 253309-1 (For single or dual magnet sensor applications)

Advanced communication and programmability

SENSOR FIELD PROGRAMMING

R-Series Analog PC Programming Kit (Part no.: 253309-1) includes the following components:

- Wall adapter style power supply (24 Vdc output)
- USB Serial converter box with USB cable to connect to PC
- Two connection cables:
  - Cable with connector if sensor is ordered with the D60 integral connector option.
  - Cable with quick connects if sensor is ordered with the integral cable option.
- R-Series Analog PC Setup software, available for download at www.mtssensors.com.

The R-Series Analog PC Setup software user-friendly interface *(see 'Figure 4')* enables the operator to take advantage of customizing the following settings:

- Magnet positions and sensor output values for Setpoint 1 *(Null)* and Setpoint 2 *(Span)* for single or dual magnets. For additional information about setpoints, refer to section *'R-Series analog handheld programmer for single-magnet sensors'*.
- Output range settings for speed, or for speed with direction.
- Assign position or velocity output functions for the single or dual magnets, and for the one or two output channels. Output function assignments are limited to the manufacturing build type of the sensor.
- Assign error output values when the magnet moves beyond the programmed setpoints.

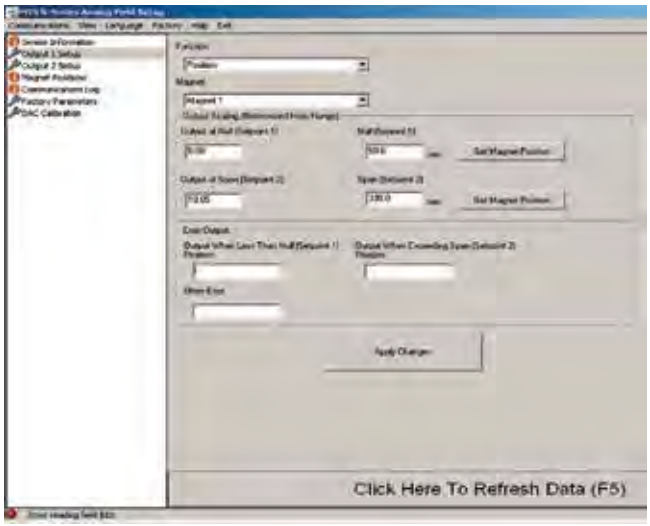

Figure 4. R-Series PC Setup software interface

R-SERIES ANALOG HANDHELD PROGRAMMER FOR SINGLE MAGNET SENSOR APPLICATIONS

The R-Series Analog Handheld Programmer *(shown in Figure 5)* can be used to program the magnet positions for the start of output, (0% = 0 Vdc, -10 Vdc, 4 mA, or 0 mA), and the end of output, (100% = 10 Vdc or 20 mA), for the single magnet version of the R-Series analog sensor.

Figure 5. R-Series Analog Handheld Programmer, Part no.: 253124

Standard factory settings place the setpoint 1 *'Null'* and setpoint 2 *'Span'* at the limits of the sensor's active stroke range. For example, a sensor ordered with 4 - 20 mA output will be factory set for 4 mA output at the bottom limit of the stroke range at the *'Null'* position. Likewise, the 20 mA output will be factory set at the top limit of the stroke range at the *'Span'* position.

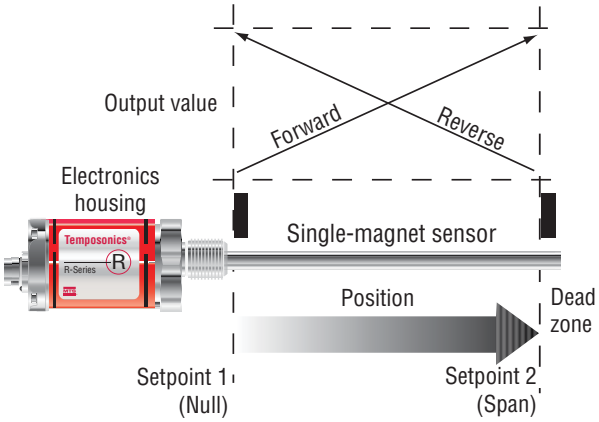

Figure 6. Standard factory settings

Setpoint 1 and setpoint 2 can be re-positioned for the actual measuring length needed anywhere within the active stroke range.

Note:

The minimum distance allowed between setpoint 1 and setpoint 2 is 25 mm (0.98 in.).

These adjustments are easily performed, even when the sensor is not directly accessible, by connecting the analog handheld programmer to the sensor's integral cable or extension cable.

When programming new setpoints, the R-Series Analog Handheld Programmer adjusts the sensor output values to either 0% or 100% at the two selected magnet positions. To program other setpoint output values, use the *'R-Series Analog PC Programming Kit' (Part no.: 253309-1).*

Note:

The R-Series Analog Handheld Programmer can also be used to change the output direction from forward-acting (e.g. 4 - 20 mA output) to reverse-acting (20 - 4 mA output), as well as, reverse-acting to forward-acting.

R-SERIES ANALOG CABINET PROGRAMMER FOR SINGLE MAGNET SENSORS

The R-Series Analog Cabinet Programmer *(see 'Figure 7')* provides the same programming functions as the R-Series Analog Handheld Programmer and is designed to mount in a control cabinet. The R-Series Analog Cabinet Programmer includes a rear snap-in mounting feature that allows the unit to mount on standard 35 mm DIN rail.

After installation, the programmer can remain wired up to both the sensor and PLC interface module if reprogramming or a different machine setup is later required, a built-in *'Program/Run'* switch allows this programmability.

Figure 7. R-Series Analog Cabinet Programmer (two shown) , Part no.: 253408 (for single-magnet sensor applications)

Model RP profile-style sensor dimension references

MODEL RP, PROFILE-STYLE SENSOR WITH CAPTIVE-SLIDING MAGNET

Drawing is for reference only, contact applications engineering for tolerance specific information.

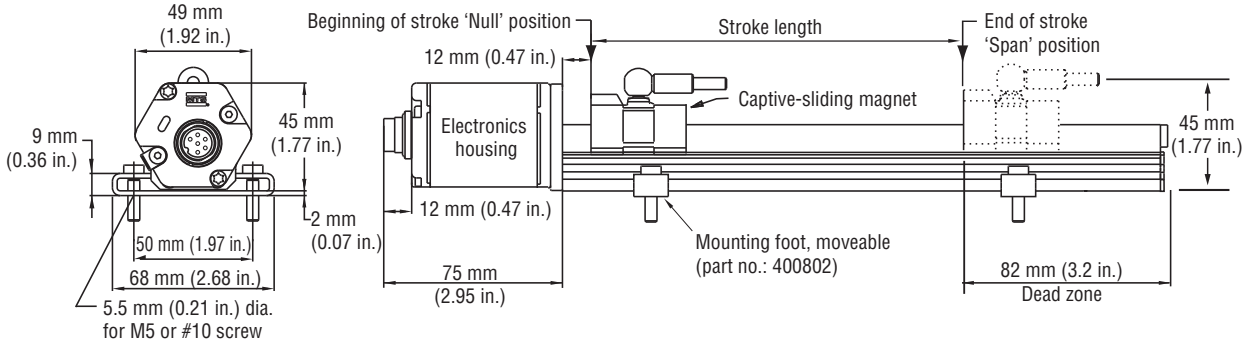

Figure 8. R-Series Model RP Profile-style sensor dimension reference (Shown with the ***D60*** integral connection type option)

MODEL RP, PROFILE-STYLE SENSOR WITH OPEN-RING MAGNET

Drawing is for reference only, contact applications engineering for tolerance specific information.

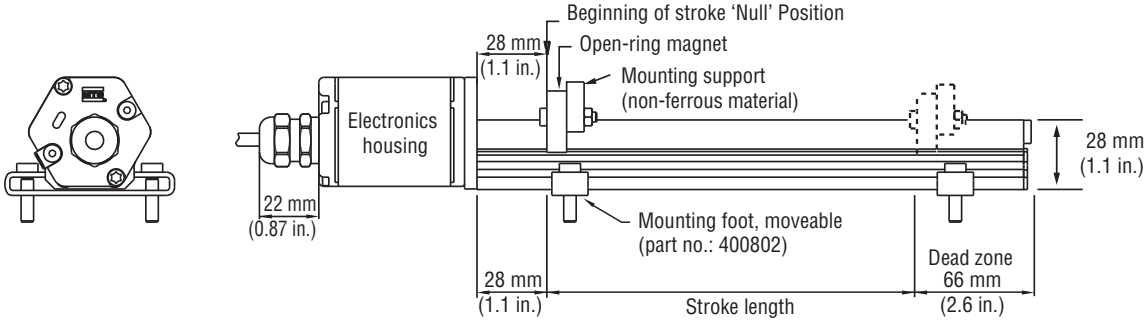

Figure 9. R-Series Model RP Profile-style sensor dimension reference (Shown with the ***R05*** integral cable connection type option)

Standard magnet selections, mounting and installation (Model RP)

SELECTION OF POSITION MAGNETS (ONE MAGNET INCLUDED WITH MODEL RP SENSOR)

Temposonics Model RP profile-style sensors offer two basic mounting methods; side grooves for use with mounting feet or a bottom groove that accepts special T-Slot nuts. Both the mounting feet and T-Slot nuts can be positioned along the sensor extrusion to best secure the sensor for each particular application.

Refer to the Accessories section of this catalog for magnet selections and detailed mounting and installation information.

Model RH rod-style sensor dimension references

The Temposonics R-Series rod-style sensor (Model RH) offers modular construction, flexible mounting configurations, and easy installation. The Model RH sensor is designed for mounting in applications where high pressure conditions exist, (5000 psi continuous, 10,000 psi spike), such as inside hydraulic cylinders. The Model RH sensor may also be mounted externally in many applications.

Stroke-dependent Dead Zones:

Stroke length:	Dead zone:
25 mm (1 in.) - 5000 mm (197 in.)	63.5 mm (2.5 in.)
5005 mm (197.1 in.) - 7620 mm (300 in.)	66 mm (2.6 in.)

MODEL RH, ROD-STYLE SENSOR WITH RING MAGNET (MAGNET ORDERED SEPARATELY)

Drawing is for reference only, contact applications engineering for tolerance specific information.

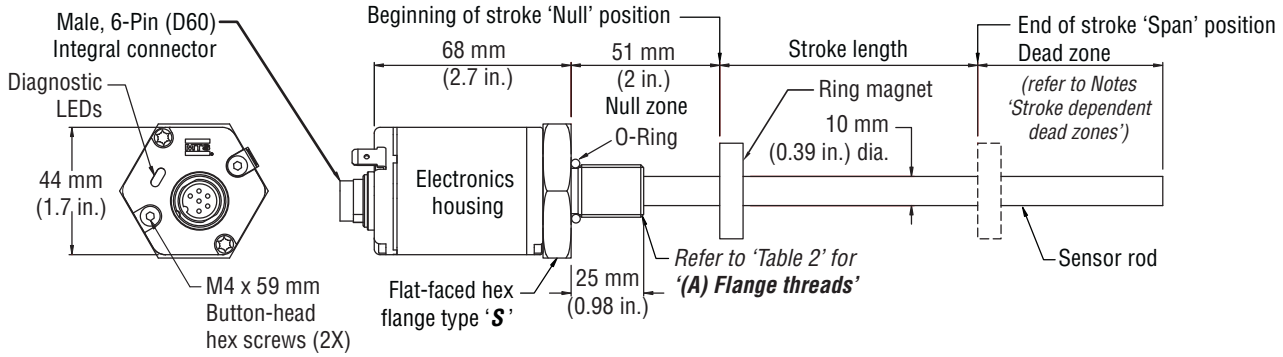

Figure 10. Model RH Rod-style sensor dimension reference (shown with the ***D60*** integral connection)

MODEL RH, ROD-STYLE SENSOR WITH 6-PIN DIN MATING CABLE CONNECTOR (MAGNET ORDERED SEPARATELY)

Drawing is for reference only, contact applications engineering for tolerance specific information.

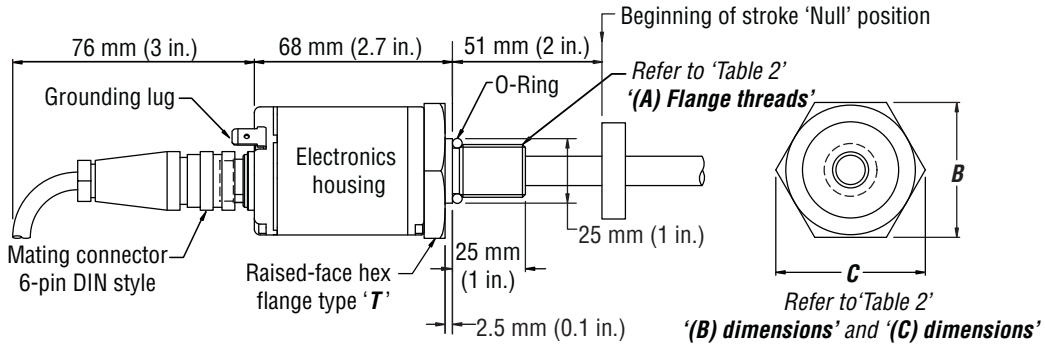

Figure 11. Model RH Rod-style sensor dimension reference (shown with mating cable connector)

Housing style Flange type	Description	(A) Flange threads	(B) Dimensions	(C) Dimensions
T	US customary threads with raised-face flange	3/4" - 16 UNF-3A	1.75 in.	2 in.
S	US customary threads with flat-faced flange	3/4" - 16 UNF-3A	1.75 in.	2 in.
M	Metric threads with flat-faced flange	M18 x 1.5	46 mm	53 mm

Table 2. Model RH Rod-style sensor housing style and flange type references

Standard magnet selections, mounting and installation (Model RH)

Magnets must be ordered separately with Model RH position sensors. The standard ring magnet (part number 201542-2) is suitable for most applications.

Refer to the Accessories section of this catalog for magnet selections and detailed mounting and installation information.

Models RP and RH connections and wiring

STANDARD MALE (D60) 6-PIN DIN INTEGRAL CONNECTOR (M16)

Note:

When using the single channel output, (pins 1 and 2), the unused pins for output 2 (pins 3 and 4) should be left floating (unconnected), unless sensor programming is being performed.

Male, 6-pin (D60) integral connector pin-out as viewed from the end of the sensor

Pin number	Wire color	Function / Analog outputs
1	Gray	Output 1/ Position 1: 0 to 10, 10 to 0, -10 to +10, +10 to -10 Vdc 4 to 20 , 20 to 4, 0 to 20, 20 to 0 mA (Required for programming mode / 0% setting)
2	Pink	Return for pin 1
3	Yellow	Output 2/ Position 2 or Speed: 0 to 10, 10 to 0, -10 to +10, +10 to -10 Vdc 4 to 20, 20 to 4, 0 to 20, 20 to 0 mA (Required for programming mode / 100% setting)
4	Green	Return for pin 3
5	Red or Brown	+24 Vdc (-15/+20%) (Required for programming mode)
6	White	DC ground (for supply) (Required for programming mode)

Models RP and RH Sensors
Ordering Information

R																				
1	2	3	4	5	6	7	8	9	10	11	12	13	14	15	16	17	18	19

(3 to 7 digit code, defined by the output option selected)

SENSOR MODEL = R 1-2

RP = Profile style
RH = Hydraulic rod style

HOUSING STYLE = 3

Model RP profile-style sensor (includes one magnet):

S = Captive-sliding magnet with ball joint at top (part no. 252182)
V = Captive-sliding magnet with ball joint at front (part no. 252184)
M = Open-ring magnet (part no. 251416-2)

Model RH rod-style sensor (magnet(s) must be ordered separately):

T = US customary threads, raised-faced flange and pressure tube, standard
U = Same as option "T", except uses fluoroelastomer seals for the electronics housing
B = Sensor cartridge only (no flange and pressure tube, stroke length < 1830 mm (72 in.))
S = US customary threads, flat-faced flange and pressure tube, standard
H = Same as option "S", except uses fluoroelastomer seals for the electronics housing
M = Metric threads, flat-faced flange and pressure tube, standard
V = Same as option "M", except uses fluoroelastomer seals for the electronics housing

STROKE LENGTH = 4-8

__ __ __ __ **M** = Millimeters *(Encode in 5 mm increments)*

__ __ __ . __ **U** = Inches and tenths *(Encode in 0.1 in. increments)*

Stroke Length Notes:

1. Profile-style sensor (model RP) stroke range = 25 mm (1 in.) - 5080 mm. (200 in.)
2. Rod-style sensor (model RH) stroke range = 25 mm (1 in.) - 7620 mm (300 in.)

CONNECTION TYPE = 9-11

Integral connector:

D60 = 6-pin DIN (M16), male, standard

Integral cables:

R __ __ = Integral cable, PVC jacket, pigtail termination, standard
F __ __ = Integral cable, black polyurethane jacket with pigtail termination

Cable length:
Encode in feet if using US customary stroke length
Encode in meters if using metric stroke length

__ __ = 3 (**03**) to 98 (**98**) ft. *or* 1 (**01**) to 30 (**30**) meters.

Cable Length Note:

MTS recommends the maximum integral cable length to be 10 meters (33 ft.). Cables greater than 10 m (33 ft.) in length are available, however, proper care must be taken during handling and installation.

INPUT VOLTAGE = 12

1 = +24 Vdc (+20% - 15%)
A = Same as option "1" except includes the High Vibration-Resistant (HVR) option for **Model RH only**, limited to stroke range = 50 mm (2 in.) - 2000 mm (78.7 in.), Refer to *'HVR Option Note'*.

HVR Option Note:

The High Vibration-Resistant (HVR) option provides the model RH rod-style sensors with increased resistance to shock and vibration for use in heavy duty machinery. Refer to "G-Series and R-Series Sensors for High Shock and Vibration Applications", document part no.: 551073 for more information.

OUTPUT *(13 - 19)* = 13-19
3 to 7 digit code defined by the output option selected from pages 12 and 13

1 Output channel with 1 magnet (3 digit code).

Output #1 = Magnet position

V01	= 0 to +10 Vdc	**A01**	= 4 to 20 mA
V11	= +10 to 0 Vdc	**A11**	= 20 to 4 mA
V21	= -10 to +10 Vdc	**A21**	= 0 to 20 mA
V31	= +10 to -10 Vdc	**A31**	= 20 to 0 mA

CONTINUED ON NEXT PAGE

R																		
1	2	3	4	5	6	7	8	9	10	11	12	13	14	15	16	17	18	19

(3 to 7 digit code, defined by the output option selected)

2 Output channels with 2 magnets (3 digit code) _____ = [ ][ ][ ] **13 - 15**

Choose a value described below to encode 3 digits (sensor part number boxes 13-15) refer to 'Setpoint Note'

	Output #1 = Magnet #1 position	**Output #2 = Magnet #2 position**
V02	= 0 to +10 Vdc	0 to +10 Vdc
V12	= +10 to 0 Vdc	+10 to 0 Vdc
V22	= -10 to +10 Vdc	-10 to +10 Vdc
V32	= +10 to -10 Vdc	+10 to -10 Vdc
A02	= 4 to 20 mA	4 to 20 mA
A12	= 20 to 4 mA	20 to 4 mA
A22	= 0 to 20 mA	0 to 20 mA
A32	= 20 to 0 mA	20 to 0 mA

2 Output channels with 1 magnet (7 digit code) _____ = [ ][ ][ ][ ][ ][ ][ ] **13 - 19**

(Choose a maximum speed value described below in Table 3 to encode all 7 digits (sensor part number boxes 13 - 19)

	Output #1 = Magnet position	**Output #2 = Speed magnitude**		
V01 _ _ _ _	= 0 to +10 Vdc	+10 (towards head)	0 (at rest)	+10 (towards tip) Vdc
V11 _ _ _ _	= +10 to 0 Vdc	+10 (towards head)	0 (at rest)	+10 (towards tip) Vdc
A01 _ _ _ _	= 4 to 20 mA	20 (towards head)	4 (at rest)	20 (towards tip) mA
A11 _ _ _ _	= 20 to 4 mA	20 (towards head)	4 (at rest)	20 (towards tip) mA
	Output #1 = magnet position	**Output #2 = Velocity (speed with direction)**		
V41 _ _ _ _	= 0 to +10 Vdc	0 (towards head)	5 (at rest)	+10 (towards tip) Vdc
V51 _ _ _ _	= +10 to 0 Vdc	+10 (towards head)	5 (at rest)	0 (towards tip) Vdc
V61 _ _ _ _	= 0 to +10 Vdc	-10 (towards head)	0 (at rest)	+10 (towards tip) Vdc
V71 _ _ _ _	= +10 to 0 Vdc	+10 (towards head)	0 (at rest)	-10 (towards tip) Vdc
V81 _ _ _ _	= -10 to +10 Vdc	-10 (towards head)	0 (at rest)	+10 (towards tip) Vdc
V91 _ _ _ _	= +10 to -10 Vdc	+10 (towards head)	0 (at rest)	-10 (towards tip) Vdc
A41 _ _ _ _	= 4 to 20 mA	4 (towards head)	12 (at rest)	20 (towards tip) mA
A51 _ _ _ _	= 20 to 4 mA	20 (towards head)	12 (at rest)	4 (towards tip) mA
	Output #1 = Magnet position (forward-acting)	**Output #2 = Magnet position (reverse-acting)**		
V03	= 0 to +10 Vdc *(3 digit code)*	+10 to 0 Vdc		

TABLE 3. FOR SENSOR MODELS WITH SPEED OUTPUT

(Choose a maximum speed value described below to encode the last 4 digits (sensor part number boxes 16-19)

For US customary stroke lengths, encode speed for in./s.

_ _ _ _ = Speed output maximum
Available range for US customary stroke lengths is 1.0 to 400.0 in./s, (0010 … 4000)

Example:
Maximum speed of 12.0 in./s, and output produced for velocity = [-10(towards head) … 0(at rest) … +10(towards tip) Volts]
Encode: **V 6 1 0 1 2 0** *or* **V 8 1 0 1 2 0**

For metric stroke lengths, encode speed for m/s *(range #1)* **or mm/s** *(range #2)* **using the information provided below:**

Speed range #1, (0 _ _ . _)

0 _ _ . _ = Speed output maximum
Speed range #1 for metric stroke lengths is 0.1 to 10.0 m/s, (0001 … 0100)

Example:
Maximum speed of 5.5 m/s, and output produced for speed = [+10(towards head) … 0(at rest) … +10(towards tip) Volts],
Encode: **V 0 1 0 0 5 5** or **V 1 1 0 0 5 5**

Speed range #2, (1 _ _ _)

1 _ _ _ = Speed output maximum.
Speed range #2 for metric stroke lengths is 25 to 90 mm/s, (1025 … 1090)

Example:
Maximum speed of 50 mm/s, and output produced for velocity = [4(towards head) … 12(at rest) … 20(towards tip) mA]
Encode: **A 4 1 1 0 5 0**

Temposonics®

Magnetostrictive, Absolute, Non-contact
Linear-Position Sensors

R-Series Models RP and RH

Synchronous Serial Interface (SSI) Output

Data Sheet

Document Part Number
550989 Revision F

R-Series SSI

Model RP Profile-style position sensor

Model RH Rod-style position sensor

FEATURES

- Linear, Absolute Measurement
- LEDs For Sensor Diagnostics
- Non-Contact Sensing Technology
- Linearity Deviation Less Than 0.01%
- Repeatability Within 0.001%
- Direct 24/25/26 Bit SSI Output, Gray/Binary Formats
- Synchronous Measurement for Accurate Velocity/Acceleration Calculations

BENEFITS

- Superior Accuracy; Resolution Down to 0.5 Micron
- Rugged Industrial Sensor
- High-Speed Update Options
- Linearity Correction Options
- Velocity Output Option
- Optional Differential Measurement Between Two Magnets

APPLICATIONS

- Continuous Operation In Harsh Industrial Conditions
- High Pressure Conditions
- For Fast, Precision Motion Control

TYPICAL INDUSTRIES

- Factory Automation
- Fluid Power
- Plastic Injection and Blow Molding
- Material Handling and Packaging
- Woodworking, Metalworking and Machine Tools

Product overview

R-Series model RP and RH sensors are extremely robust and are ideal for continuous operation under harsh industrial conditions. MTS offers two standard sensor housings, rod and profile extrusion. The rod housing is capable of withstanding high pressures such as those found in hydraulic cylinders. The profile extrusion housing provides convenient mounting options and captive-sliding magnets which utilize slide bearings of special material that reduce friction, and help mitigate dirt build up. The sensor head contains the active signal conditioning and a complete integrated electronics interface. Double shielding is used to ensure EMI protection for unsurpassed reliability and operating safety.

Product specifications

Parameters	Specifications
OUTPUT	
Measured output variables:	Position, or position difference between 2 magnets, or velocity, internal temperature
Resolution:	0.5 µm, 1 µm, 2 µm, 5 µm, 10 µm, 20 µm, 50 µm, 100 µm
Update Rate	
Measuring length:	300 750 1000 2000 5000 mm
Measurements/Sec:	3.7 3.0 2.3 1.2 0.5 kHz *(Up to 10 kHz for high-speed update option)*
Linearity deviation:	< ± 0.01% full stroke, (minimum ± 40 µm) *(Linearity Correction Option (LCO) available)*
Repeatability:	< ± 0.001% full stroke (minimum ± 2.5 µm)
Hysteresis:	< 4 µm (2 µm is typical)
Outputs:	**Interface:** Synchronous Serial Interface (SSI) (RS-422 type differential signal pairs) **Data format:** Binary or gray, optional parity and error bit, optional internal temperature. **Data length:** 8 to 32 bit **Data speed (Baud rate):** 70 kBd* to 1 MBd, depending on cable length (see below):
Length:	<3 <50 <100 <200 <400 m
Baud rate:	1.0 MBd <400 kBd <300 kBd <200 kBd <100 kBd
Stroke length:	**Range (Profile style):** 25 to 5080 mm (1 to 200 in.) **Range (Rod style):** 25 to 7620 mm (1 to 300 in.)
Distance between magnets:	75 mm (3 in.) Minimum for 2 magnet differential output ** With standard monoflop of 16 µs*
ELECTRONICS	
Operating voltage:	**+24 Vdc nominal:** -15% or +20% * **Polarity protection:** up to -30 Vdc **Overvoltage protection:** up to 36 Vdc **Current drain:** 100 mA typical **Dielectric withstand voltage:** 500 Vdc (DC ground to machine ground)

Parameters	Specifications
ENVIRONMENTAL	
Operating conditions:	**Operating temperature:** -40 °C (-40 °F) to +75 °C (+167 °F) **Relative humidity:** 90% no condensation **Temperature coefficient:** < 15 ppm/ °C
EMC test:	**Electromagnetic emission:** IEC/EN 50081-1 **Electromagnetic susceptibility:** IEC/EN 50082-2, IEC/EN 61000-4-2/3/4/6, level 3/4 criterium A, CE qualified
Shock rating:	100 g (single hit)/ IEC standard 68-2-27 (survivability)
Vibration rating:	15 g (30 g with HVR option)/ 10 to 2000 Hz, IEC standard 68-2-6
WIRING	
Connection type:	7-pin male D70 (M16) connector, 10-pin male MS connector or integral cable
PROFILE STYLE SENSOR (MODEL RP)	
Electronic head:	Aluminum housing with diagnostic LED display (LEDs located beside connector/ cable exit)
Sealing:	IP 65**
Sensor extrusion:	Aluminum (Temposonics profile style)
Mounting	Any orientation. Adjustable mounting feet or T-slot nut (M5 threads) in bottom groove
Magnet types:	Captive-sliding magnet or open-ring magnet
ROD STYLE SENSOR (MODEL RH)	
Electronic head:	Aluminum housing with diagnostic LED display (LEDs located beside connector/ cable exit)
Sealing:	IP 67 or IP 68 for integral cable models**
Sensor rod:	304L stainless steel
Operating pressure:	350 bar static, 690 bar peak (5000 psi, 10,000 psi peak)
Mounting:	Any orientation. Threaded flange M18 x 1.5 or 3/4 - 16 UNF-3A
Typical mounting torque:	45 N-m (33 ft. - lbs.)
Magnet types:	Ring magnet, open-ring magnet, or magnet float

* UL Recognition requires an approved power supply with energy limitation (UL 61010-1), or Class 2 rating according to the National Electrical Code (USA) / Canadian Electrical Code.

** The IP rating is not part of the UL Recognition.

Synchronous Serial Interface (SSI)

Temposonics R-Series sensors with SSI fulfill all requirements of the SSI standard for an absolute encoder. The position value is encoded in a 24/25/26 code format and is transmitted at high speed in SSI standard format to the control device. The main feature of SSI is the synchronized data transfer. Data transfer synchronization simplifies the closed-loop control system.

A clock pulse train from a controller is used to gate out sensor data. One bit of position data is transmitted to the controller for each clock pulse received by the sensor *(see 'Figures 1 and 2')*. The absolute position data is continually updated by the sensor and converted by the shift register into serial information. *(see 'Figure 3')*.

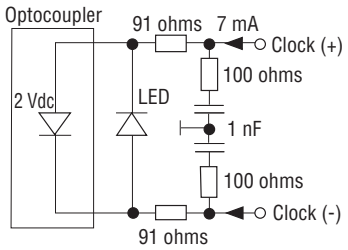

Figure 1. Sensor input

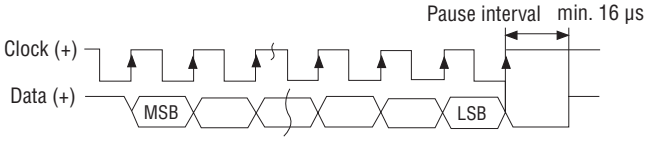

Figure 2. Timing Diagram

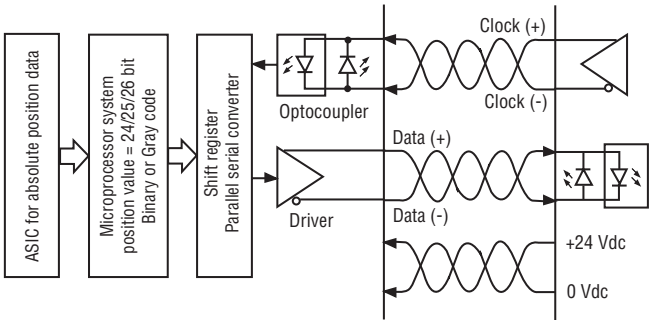

Figure 3. Logic Diagram

Measuring modes

THE SENSOR MEASUREMENT CYCLE

For all Temposonics position sensors, the measurement cycle begins with a very short electrical current pulse being applied to the sensor's waveguide. This is called the 'interrogation pulse'. It creates a magnetic field that interacts with another magnetic field emanating from the position magnet. This interaction produces the magnetostrictive effect and results in a localized mechanical strain in the sensor's waveguide. When the interrogation pulse ends, the strain is suddenly released, sending a rotational sonic strain pulse down the waveguide. The measurement cycle ends when the sonic strain pulse arrives at the end of the waveguide and is detected by the sensor's electronics. By accurately measuring the travel time of the sonic strain pulse the magnet's precise position is determined.

ASYNCHRONOUS MEASURING MODE

For the SSI sensor, the position data is always communicated to the controller or PLC using the Synchronous Serial Interface format. When the SSI sensor is operated as fast as possible, i.e. in Asynchronous Measuring Mode, the position data is updated and stored inside the sensor as quickly as the sensor's measurement cycle will allow. The minimum time for the measurement cycle is determined by the sensor's overall stroke length.

The controller's loop time will determine when the sensor's stored data is collected. For this mode the controller loop time is not synchronized with the sensor's measurement cycle time. However, if it is always slower than the sensor's cycle time then there will always be new position data available in the sensor's shift register, waiting to be clocked out over the SSI interface.

As shown in '*Figure 4*', although the sensor is updating the position data as fast as possible, the actual data values collected by the controller can have varying delay times. This is shown as the delays from when the magnet's position was captured, (at the instant the interrogation pulse had started the relevant measurement cycle), to when the data is delivered at the end of the controller loop cycle.

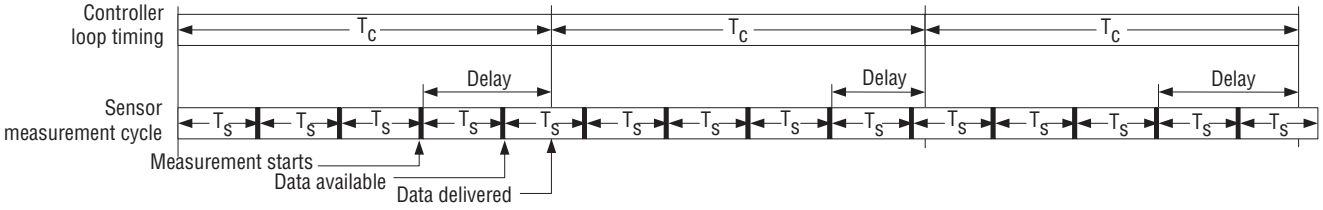

Figure 4. Asynchronous measuring mode, controller loop timing

R-Series SSI

SYNCHRONOUS MEASURING MODE ('SYNC 1' OPTION)

Using the Synchronous Measuring Mode, the Temposonics SSI sensor has timing capabilities to optimize the communication link to the controller. Many motion control applications require velocity and/or acceleration be calculated, and therefore, must rely on position data having minimal delay, and minimal timing variability. With the Synchronous Measuring Mode, MTS Sensors has developed a proprietary algorithm to not only guarantee true measurement synchronization but at the same time minimize any propagation delay relative to the controller loop rate.

First, the sensor quickly determines the controller's loop timing – typically after one stable cycle period. Once this is known, and determined to be repeatable to specified limits, the sensor knows exactly when data will be required. The sensor then determines when to start the next measurement cycle, delaying the interrogation pulse, so that the measurement cycle will complete just in time to deliver the freshest data possible when the controller makes the next request, *(see 'Figure 5')*.

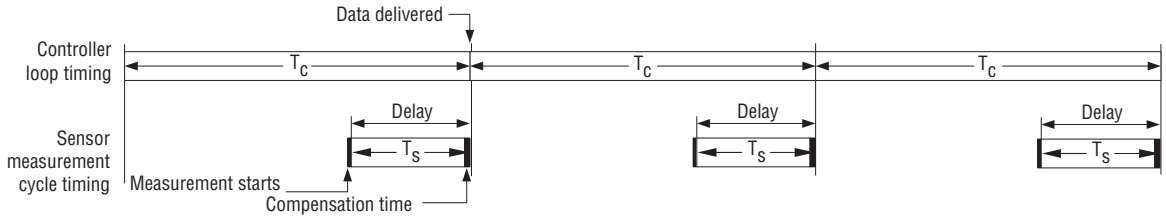

Figure 5. Synchronous measuring mode, Sync 1 option

This form of synchronization to the controller provides the high quality position data needed for complex motion control algorithms and for multiple axes machines requiring tight coordination. When developing applications that will use the Synchronous Measuring Mode, the designer must choose a controller or PLC input module that supports this mode.

Advanced output options

The Temposonics SSI sensor has advanced output options that are helpful for maximizing system performance in demanding applications requiring very high accuracy and speed.

ENHANCEMENTS FOR THE SYNCHRONOUS MEASURING MODE ('SYNC 2' & 'SYNC 3' OPTIONS)

The 'Sync 2' option provides a high speed update feature. When motion control applications require new position data faster than the sensor's measurement cycle time, the high speed update feature provides extrapolated data values, calculated on the fly. A prediction algorithm generates usable position data for delivery to the controller whenever the sensor has not yet completed the next measurement cycle. These extrapolated values are used by the controller as normally updated position data, allowing very fast controller loop times that are necessary for tight control of high speed applications.

The 'Sync 3' option provides an additional enhancement to the high speed update feature of Sync 2. For this mode the prediction algorithm is used for all of the sensor's position data to compensate for the inherent lag time due to the sensor's measurement cycle.

LINEARITY CORRECTION OPTION (LCO)

The Linearity Correction Option (LCO) provides improved sensor output accuracy. For most stroke lengths linearity accuracy is improved up to a factor of 5 resulting in deviations from actual position of less than +/- 20 microns (0.0008 in.). For stroke lengths over 5000 mm (197 in.), the linearity accuracy is improved up to a factor of 10. Selecting the sensor style and magnet is important (both must be matched together). Contact the factory for assistance when designing for the LCO in your application.

ERROR DELAY (SKIP FILTER)

For applications having very high shock and vibration levels that exceed the sensor specification ratings the Error Delay (Skip Filter) can be used to prevent errors being produced on some types of controllers. During these very high shock events the sensor may fail to capture the magnet return signal, and if so, will normally output a zero position value. The Error Delay will instead repeat the last good output value. For long duration shock events the Error Delay will continue to repeat the good output value up to the number of times selected.

NOISE REDUCTION FILTER

Complex systems can have various noise sources sometime significant enough to require filtering. If needed, a Simple Moving Average (SMA) filter function is available to reduce noise effects. The filter algorithm can be adjusted to include the last 2, 4, or 8 output values in the calculated average.

PEAK REDUCTION FILTER

A variation of the filter function is the Weighted Infinite Average (WIA) filter. If needed, this filter can provide a greater smoothing effect and has an adjustable weight parameter.

TEMPERATURE MONITORING

A temperature monitoring device is included inside the sensor electronics housing. Its output can be used to track the general operating conditions for the sensor and to monitor for over temperature. It cannot be used for calculating temperature compensation.

Enhanced monitoring and diagnostics

SENSOR STATUS AND DIAGNOSTIC DISPLAY

Diagnostic LEDs (green/red), located beside the connector or cable exit *(see 'Figure 6')*, provide basic visual monitoring for normal sensor operation and troubleshooting. Diagnostic display LEDs indicate four modes described in *'Table 1'*.

Figure 6. R-Series sensor Integrated diagnostic LEDs

Green	Red	Operation status/mode
ON	OFF	Normal function (operation mode)
ON	ON	Magnet not detected or wrong quantity of magnets
ON	Flashing	Sensor not synchronous *(For synchronous measurement mode only)*
Flashing	ON	Programming mode

Table 1. Diagnostic display indicator modes

Advanced communication and programmability

SENSOR FIELD PROGRAMMING

Temposonics R-Series sensors with SSI are pre configured at the factory by model number designation. In the event that sensor parameter changes are required in the field, the *'R-Series SSI PC Programming Kit, part no. 253310-1' (see 'Figure 7')* can be used to easily program the sensor electronically without opening the sensor's housing.

Figure 7. R-Series SSI PC Programming Kit, Part no. 253310-1

R-SERIES SSI PC PROGRAMMING KIT (PART NO.: 253310-1) INCLUDES THE FOLLOWING COMPONENTS:

- Wall adapter style power supply (24 Vdc output).
- USB Serial converter box with USB cable to connect to PC
- Two connection cables:
  - Cable with connector if sensor is ordered with the D70 integral connector option.
  - Cable with quick connects if sensor is ordered with the integral cable option.
- R-Series SSI PC Setup software, available for download at www.mtssensors.com

The Utility software included in the R-Series SSI PC Setup software provides a user-friendly interface *(see 'Figure 8').*

The setup software allows the following set of parameters to be field programmed.

FIELD PROGRAMMABLE PARAMETERS:

- Data length
- Data format
- Resolution
- Measuring direction
- Synchronous / asynchronous measurement
- Measurement filter

Figure 8. R-Series SSI PC Setup software interface

Model RP profile-style sensor dimension references

MODEL RP, PROFILE-STYLE SENSOR WITH CAPTIVE-SLIDING MAGNET

Drawing is for reference only, contact applications engineering for tolerance specific information.

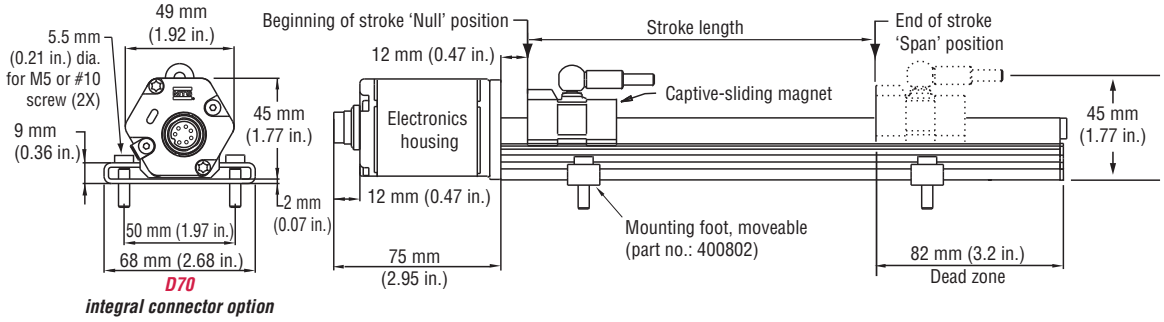

Figure 9. R-Series Model RP Profile-style sensor dimension reference (Shown with ***D70*** Integral connector option)

MODEL RP, PROFILE-STYLE SENSOR WITH OPEN-RING MAGNET

Drawing is for reference only, contact applications engineering for tolerance specific information.

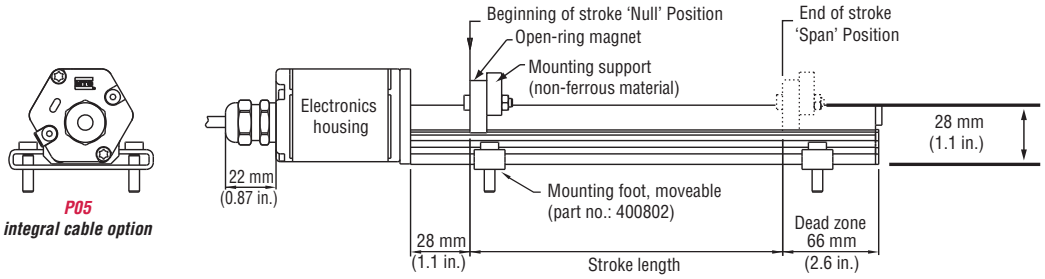

Figure 10. R-Series Model RP Profile-style sensor dimension reference (Shown with ***P05*** Integral cable option)

Standard magnet selections, mounting and installation (Model RP)

SELECTION OF POSITION MAGNETS (ONE MAGNET INCLUDED WITH MODEL RP SENSOR)

Temposonics Model RP profile-style sensors offer two basic mounting methods; side grooves for use with mounting feet or a bottom groove that accepts special T-Slot nuts. Both the mounting feet and T-Slot nuts can be positioned along the sensor extrusion to best secure the sensor for each particular application.

Refer to the Accessories section of this catalog for magnet selections and detailed mounting and installation information.

Model RH rod-style sensor dimension references

The Temposonics R-Series rod-style sensor (Model RH) offers modular construction, flexible mounting configurations, and easy installation. The Model RH sensor is designed for mounting in applications where high pressure conditions exist, (5000 psi continuous, 10,000 psi spike), such as inside hydraulic cylinders. The Model RH sensor may also be mounted externally in many applications.

Stroke-dependent Dead Zones:	
Stroke length:	**Dead zone:**
25 mm (1 in.) - 5000 mm (197 in.)	63.5 mm (2.5 in.)
5005 mm (197.1 in.) - 7620 mm (300 in.)	66 mm (2.6 in.)

MODEL RH, ROD-STYLE SENSOR WITH RING MAGNET (MAGNET ORDERED SEPARATELY)
Drawing is for reference only, contact applications engineering for tolerance specific information.

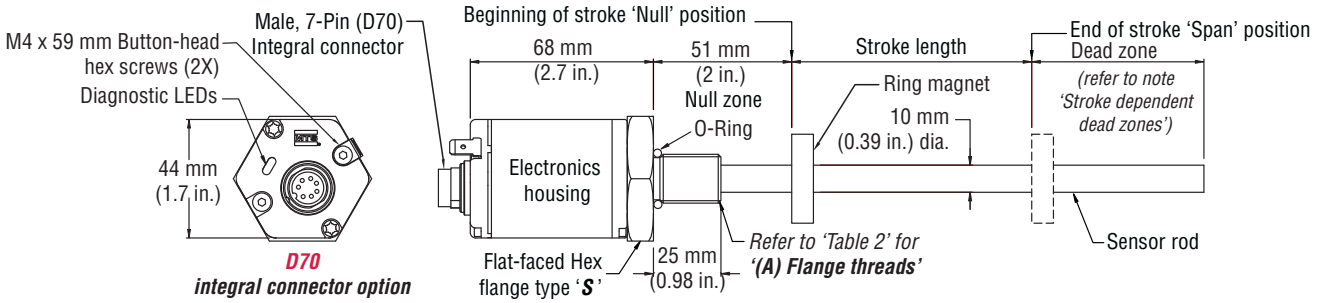

Figure 11. Model RP Profile-style sensor dimension reference (Shown with ***D70*** Integral connector option)

MODEL RH, ROD-STYLE SENSOR WITH 7-PIN MATING CONNECTOR (MAGNET ORDERED SEPARATELY)
Drawing is for reference only, contact applications engineering for tolerance specific information.

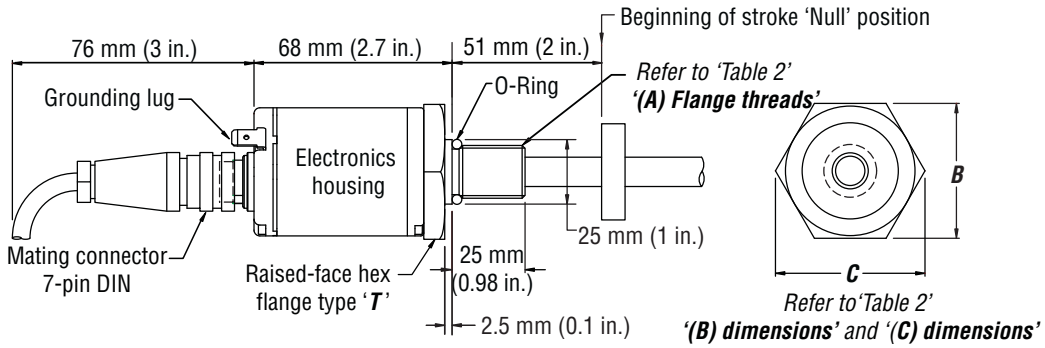

Figure 12. Model RH Rod-style sensor dimension reference (Shown with mating cable connector)

Housing style flange type	Description	(A) Flange threads	(B) Dimensions	(C) Dimensions
T	US customary threads with raised-face flange	3/4" - 16 UNF-3A	1.75 in.	2 in.
S	US customary threads with flat-faced flange	3/4" - 16 UNF-3A	1.75 in.	2 in.
M	Metric threads with flat-faced Flange	M18 x 1.5	46 mm	53 mm

Table 2. Model RH Rod-style sensor housing style and flange type references

Standard magnet selections, mounting and installation (Model RH)

Magnets must be ordered separately with Model RH position sensors. The standard ring magnet (part number 201542-2) is suitable for most applications.

Refer to the Accessories section of this catalog for magnet selections and detailed mounting and installation information.

Connections and wiring

STANDARD MALE 7-PIN DIN (D70) INTEGRAL CONNECTOR WIRING

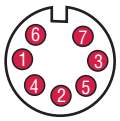

Male, 7-pin (D70) integral connector (pin-out as viewed from the end of the sensor)

Pin no.	Ext. cable	Function / SSI outputs
1	Gray	Data (-)
2	Pink	Data (+)
3	Yellow	Clock (+)
4	Green	Clock (-)
5	Brown	+24 Vdc (-15/+20%)
6	White	DC ground (for supply)
7	N.C.	N/A

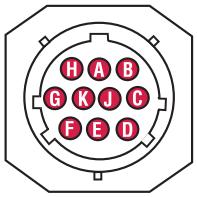

Male, 10-pin (MS) integral connector (pin-out as viewed from the end of the sensor)

Pin no.	Ext. cable	Function / SSI outputs
A	White	DC Ground
B	-	No connection
C	Gray	Data (-)
D	Pink	Data (+)
E	Red	+24 Vdc (-15 / +20%)
F	-	No connection
G	Yellow	Clock (+)
H	Green	Clock (-)
I	-	No connection
J	-	No connection
K	-	No connection

Notes:

1. Sensor diagnostics LED's are not available with the MS connector option.
2. MS style cable connector, part no.: 370013, (field installed) mates with the integral MS connector.

R											S										
1	2	3	4	5	6	7	8	9	10	11	12	13	14	15	16	17	18	19	20	21	22

(for advanced options)

SENSOR MODEL = R 1-2

RP = Profile style

RH = Hydraulic rod style

HOUSING STYLE = 3

Model RP profile-style sensor (includes one magnet):

S = Captive-sliding magnet with ball joint at top (part no. 252182)

V = Captive-sliding magnet with ball joint at front (part no. 252184)

M = Open-ring magnet (Part no. 251416-2)

Model RH rod-style sensor (magnet(s) must be ordered separately):

T = US customary threads, raised-faced flange and pressure tube, standard

U = Same as option 'T', except uses fluoroelastomer seals for the electronics housing

B = Sensor cartridge only (no flange and pressure tube, stroke length < 1830 mm (72 in.))

S = US customary threads, flat-faced flange and pressure tube, standard

H = Same as option 'S', except uses fluoroelastomer seals for the electronics housing

M = Metric threads, flat-faced flange and pressure tube, standard

V = Same as option 'M', except uses fluoroelastomer seals for the electronics housing

STROKE LENGTH = 4-8

_ _ _ _ **M** = Millimeters
(Encode in 5 mm increments)

_ _ _ . _ **U** = Inches and tenths
(Encode in 0.1 in. increments)

Stroke Length Notes:

1. Profile-style sensor (model RP) stroke range = 25 mm (1 in.) - 5080 mm. (200 in.)
2. Rod-style sensor (model RH) stroke range = 25 mm (1 in.) - 7620 mm (300 in.

CONNECTION TYPE = 9-11

Integral connector:

D70 = 7-pin DIN (M16), male, standard

MS0 = 10-Pin MS style, male

Integral cables:

P _ _ = Integral high-performance cable, orange jacket with pigtail termination

R _ _ = Integral cable, PVC jacket, pigtail termination, standard

F _ _ = Integral cable, black polyurethane jacket with pigtail termination

Cable length:
Encode in feet if using US customary stroke length
Encode in meters if using metric stroke length

_ _ = 3 (**03**) to 98 (**98**) ft. *or* 1 (**01**) to 30 (**30**) meters.

Cable Length Note:

MTS recommends the maximum integral cable length to be 10 meters (33 ft.). Cables greater than 10 m (33 ft.) in length are available, however, proper care must be taken during handling and installation.

INPUT VOLTAGE = 12

1 = +24 Vdc (+20% - 15%)

A = Same as option "1" except includes the High Vibration-Resistant (HVR) option for **Model RH only**, limited to stroke range = 25 mm (1 in.) - 2000 mm (78.7 in.), Refer to *'HVR Option Note'*.

HVR Option Note:

The High Vibration-Resistant (HVR) option provides the model RH rod-style sensors with increased resistance to shock and vibration for use in heavy duty machinery. Refer to "G-Series and R-Series Sensors for High Shock and Vibration Applications", document part no.: 551073 for more information.

OUTPUT *(13 - 19)*
S *+ the 6 digit Output code defined (Continue to the next page)*
OPTIONAL ADVANCED OUTPUTS *(18 - 22)*
99 *+ the 3 digit Output code defined (Continue to the next page)*

R-Series SSI

R-Series Models RP and RH Sensors
Ordering Information

R												S									
1	2	3	4	5	6	7	8	9	10	11	12	13	14	15	16	17	18	19	20	21	22

Optional Advanced Outputs

OUTPUT *(13 - 19)*
S *+ the 6 digit Output code*

=	S						
13	14	15	16	17	18	19

13-19

[14] Data length
- **1** = 25 bits
- **2** = 24 bits
- **3** = 26 bits

[15] Output Format
- **B** = Binary
- **G** = Gray code

[16] Resolution
- **1** = 0.005 mm
- **2** = 0.01 mm
- **3** = 0.05 mm
- **4** = 0.1 mm
- **5** = 0.02 mm
- **6** = 0.002 mm
- **8** = 0.001 mm
- **9** = 0.0005 mm

[17] Filtering Performance
- **1** = Standard, no filter
- **A** = No filter + error delay (4 cycles)
- **C** = No filter + error delay (8 cycles)
- **D** = No filter + error delay (10 cycles)
- **G** = Noise reduction filter (8 values) + error delay (10 cycles)
- **K** = Peak reduction filter (8 values)
- **N** = Peak reduction filter (8 values) + error delay (10 cycles)

[18] [19] Signal Options (scale orientation)
- **00** = Measuring direction forward, async
- **01** = Measuring direction reverse, async
- **02** = Measuring direction forward, sync1
- **05** = Measuring direction forward, bit-25 = Alarm, bit-26 = Parity even, (select data length 26 bits), async
- **16** = Measuring direction forward, LCO
- **99** = **Advanced output options (Enter 99 and an additional 3 character suffix as shown below for boxes 18-22). Advanced outputs are optional and are not required to complete a valid model number**.

OPTIONAL ADVANCED OUTPUTS *(18- 22)*
99 *+ 3 digit Output code*

= | 9 | 9 | | | |
|---|---|---|---|---|
| 18 | 19 | 20 | 21 | 22 |

18-22

[20] Measurement Contents
- **1** = Position
- **2** = Position difference between 2 magnets
- **3** = Velocity
- **4** = Position + temperature
- **5** = Position difference between 2 magnets + temperature
- **6** = Velocity + temperature

[21] Direction and Sync Mode
- **1** = Forward async
- **2** = Forward sync1
- **3** = Forward sync2
- **4** = Forward sync3
- **5** = Reverse async
- **6** = Reverse sync1
- **7** = Reverse sync2
- **8** = Reverse sync3

[22] Linearity Correction Option (LCO) and Communication Diagnostics
- **0** = No further option
- **1** = LCO
- **2** = Additional alarm bit + even parity bit (data length 26 bits)
- **4** = Additional alarm bit + even parity bit + LCO (data length 26 bits)

Temposonics®

Magnetostrictive, Absolute, Non-contact
Linear-Position Sensors

R-Series Models RP and RH

CANbus Outputs (CANopen/CANbasic)

Data Sheet

Document Part Number
550991 Revision E

Model RP Profile-style position sensor

Model RH Rod-style position sensor

R-Series CANbus

FEATURES

- Linear, Absolute Measurement
- LEDs For Sensor Diagnostics
- Superior Accuracy, Resolution down to 2 µm
- Non-Contact Sensing Technology
- Linearity Deviation Less Than 0.01%
- Repeatability Within 0.001%
- Direct CAN Output (Position + Velocity)

BENEFITS

- Rugged Industrial Sensor
- Selectable Bus Termination (CANopen)
- CANopen with Heartbeat Function

APPLICATIONS

- Continuous Operation In Harsh Industrial Conditions
- High Pressure Conditions
- For Accurate, Multi-Magnet Position Measurement (up to 20 positions per sensor)

TYPICAL INDUSTRIES

- Factory Automation
- Fluid Power
- Plastic Injection and Blow Molding
- Material Handling and Packaging

Product overview

R-Series model RH and RP sensors are extremely robust and are ideal for continuous operation under harsh industrial conditions.

MTS offers two standard sensor housings, rod and profile extrusion. The rod housing is capable of withstanding high pressures such as those found in hydraulic cylinders.

The profile extrusion housing provides convenient mounting options and captive sliding magnets which utilize slide bearings of special material that reduce friction, and help mitigate dirt build up.

The sensor head contains the active signal conditioning and a complete integrated electronics interface. Double shielding is used to ensure EMI protection for unsurpassed reliability and operating safety.

Product specifications

Parameters	Specifications
OUTPUT	
Measured output variables:	Position, velocity, optional multi-magnet position measurements (up to 20 magnet positions simultaneously)
Resolution:	**CANopen:** **Position:** 5 µm, 2 µm **Velocity:** 0.5 mm/s, 0.2 mm/s **CANbasic:** **Position:** 5 µm, 2 µm **Velocity:** 1.0 mm/s, 0.1 mm/s
Update times:	1.0 ms up to 2400 mm, 2.0 ms up to 4800 mm, 4.0 ms up to 7600 mm stroke length Add 0.5 ms for CANbasic up to 1200 mm
Linearity deviation:	< ± 0.01% full stroke (minimum ± 40 µm) (Linearity Correction Option (LCO) available)
Repeatability:	< ± 0.001% full stroke (minimum ± 2.5 µm)
Hysteresis:	< 4 µm
Outputs:	**Interface:** CAN-Fieldbus system ISO DIS 11898 **Data protocol CANopen:** CIA standard DS-301 V4.02 encoder profile DS-406 V3.1 **CANbasic:** CAN 2.0 A

Baud rate, kBit/s:	1000	800	500	250	125	50	20
Cable length, m:	<25	<50	<100	<250	<500	<1000	<2500

Sensors will be supplied with ordered Baud rate which can be changed by the customer.

Stroke length:	**Range (Profile style):** 25 mm to 5080 mm (1 in. to 200 in.) **Range (Rod style):** 25 mm to 7620 mm (1 in. to 300 in.)
ELECTRONICS	
Operating voltage:	**+24 Vdc nominal:** -15% or +20%* **Polarity protection:** up to -30 Vdc **Over voltage protection:** up to 36 Vdc **Current drain:** 100 mA typical **Dielectric withstand voltage:** 500 Vdc (DC ground to machine ground)

Parameters	Specifications
ENVIRONMENTAL	
Operating conditions:	**Operating temperature:** -40 °C (-40 °F) to +75 °C (+167 °F) **Relative humidity:** 90% no condensation **Temperature coefficient:** < 15 ppm/ °C
EMC test:	**Electromagnetic emission:** IEC/EN 50081-1 **Electromagnetic susceptibility:** IEC/EN 50082-2, IEC/EN 61000-4-2/3/4/6, level 3/4 criterium A, CE qualified
Shock rating:	100 g (single hit)/IEC standard 68-2-27 (survivability)
Vibration rating:	15 g / 10 to 2000 Hz / IEC standard 68-2-6
WIRING	
Connection type:	Single or dual 6-pin male D60 (M16) connector or two 5-pin Male/Female D54 (M12) connectors with 4-pin male (MS) connector or integral cable
PROFILE STYLE SENSOR (MODEL RP)	
Electronic head:	Aluminum housing with diagnostic LED display (LEDs located beside connector/ cable exit)
Sealing:	IP 65**
Sensor extrusion:	Aluminum (Temposonics, profile style)
Mounting:	Any orientation. Adjustable mounting feet or T-slot nut (M5 threads) in bottom groove
Magnet types:	Captive-sliding magnet or open-ring magnet
ROD STYLE SENSOR (MODEL RH)	
Electronic head:	Aluminum housing with diagnostic LED display (LEDs located beside connector/ cable exit)
Sealing:	IP 67 or IP 68 for integral cable models**
Sensor rod:	304L stainless steel
Operating pressure:	350 bar static, 690 bar peak (5000 psi static, 10,000 psi peak)
Mounting:	Any orientation. Threaded flange M18 x 1.5 or 3/4 - 16 UNF-3A
Typical mounting torque:	45 N-m (33 ft. - lbs.)
Magnet types:	Ring magnet, open-ring magnet, or magnet float

* UL Recognition requires an approved power supply with energy limitation (UL 61010-1), or Class 2 rating according to the National Electrical Code (USA) / Canadian Electrical Code.

** The IP rating is not part of the UL Recognition.

Enhanced monitoring and diagnostics

SENSOR STATUS AND DIAGNOSTIC DISPLAY

Integrated diagnostic LEDs (green/red), located on top of the sensor housing *(see 'Figure 1')*, provide basic visual monitoring for normal sensor operation and troubleshooting. Diagnostic display LEDs indicate four modes described in *'Table 1'*.

Figure 1. R-Series sensor Integrated diagnostic LEDs

Green	Red	Operation status/mode
ON	OFF	Normal function (operation mode)
ON	ON	Magnet not detected or wrong quantity of magnets
OFF	ON	Initialization error
Flashing	Flashing	Power out of range (high or low)

Table 1. Diagnostic display indicator modes

CANbus protocol

Temposonics R-Series models RP and RH linear-position sensors, as slave devices, fulfill all requirements of the CANbus (ISO 11898) protocol. The sensor's electronics convert the position measurements into bus oriented outputs and transfer this data directly to the controller.

The bus interface is appropriate for serial data transfer up to 1 Mbps maximum. Sensor integrated software supports bus profiles CANopen, CANbasic and DeviceNet for a comprehensive customized configuration of the sensor-bus system.

DeviceNet documentation is available from the MTS website at http://www.mtssensors.com/products/linear-position-sensors/index.html.

OPERATION MODES

R-Series sensors with CANbus protocol provide the following single or multi-magnet measurements:

Standard measurements:

- CANbasic; Position + velocity (using one magnet)
- CANopen; Position + velocity (using one to four magnets) + sensor internal electronics temperature

Multi-magnet measurement:
CANbasic; Positions for each of two to twenty magnets simultaneously.

When using multiple magnets, the minimum allowed distance between magnets is 75 mm (3 in.) to maintain proper sensor output *(see 'Figure 2')*.

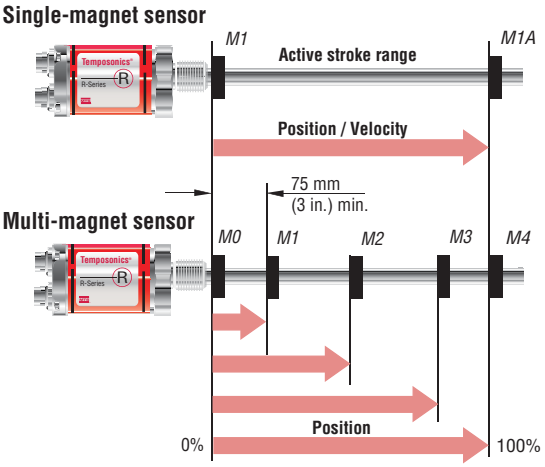

Figure 2. Single and multi-magnet output diagram

CANopen communication and functionality

CANopen corresponds to encoder profile *'DS-406 V3.1 (CIA standard DS-301 V4.02)'*. The CANopen functionality is described below in the following communication objects.

Note:

Conformance Test Certificate No. CiA199902-301V30/I-004 is provided by the CANbus user organization CiA (CAN in Automation) for MTS CANopen sensors.

LINEARITY CORRECTION OPTION (LCO)

The Linearity Correction Option (LCO) provides improved sensor output accuracy. For most stroke lengths linearity accuracy is improved up to a factor of 5 resulting in deviations from actual position of less than +/- 20 microns (0.0008 in.). For stroke lengths over 5000 mm (197 in.), the linearity accuracy is improved up to a factor of 10. Selecting the sensor style and magnet is important (both must be matched together). Contact the factory for assistance when designing for the LCO in your application.

SERVICE DATA OBJECT (SDO)

The SDO is mainly used for sensor configuration. Selectable parameters are as follows:

- Resolution for position + velocity
- 4 set points
- Preset of the operation range and the null position for four magnets

PROCESS DATA OBJECT (PDO)

The PDO provides real-time data transfer of sensor measurements in up to 8-byte data blocks. The sensor uses PDO's to relay information about magnet position, velocity, limit status, cam control and operation range for up to four magnets.

Data formats:

- 32-bits for position
- 16-bits for velocity
- 8-bits for value limit.

CANbus outputs

PDO TRANSMISSION TYPE

Asynchronous (cycle time of 1 to 65.535 ms) or synchronous

- Synchronization Object (SYNC)
- Emergency Object
- Nodeguard Object
- Heartbeat function
- Selectable bus termination
- Monitoring for the sensor internal electronics temperature

CANopen communication and functionality

CANOPEN CONFIGURATION

A software file is used as an Electronic Data Sheet (EDS) for sensor configuration. The EDS file is available on the R-Series Setup software mini diskette, part number: 551052 that comes with the sensor. To download the latest software go to MTS website at: http://www.mtssensors.com.

Note: Factory default node address = 127 (7F hex).

CANbasic (MTS)

CANbasic (MTS) allows a simple, flexible adaptation to customized profiles with a short bus access. The CANbasic protocol complies with CAN the 2.0A standard and includes applications data for single-magnet measurement (position, velocity, sensor status and five setpoints).

Note: Factory default node address = 00.

CANbasic (Multi-magnet measurement)

CANbasic (Multi-magnet measurement) provides position measurement on a single sensor using a maximum of twenty magnets. Setup and operation are accomplished through the on-site control system.

Note: Factory default node address = 00.

CANopen handheld address programmer

The *CANopen Handheld Address Programmer (see 'Figure 3')* is offered as an accessory used to setup the Node-Address for sensors with the CANopen interface. This setup is usually completed by the bus' LMT/LSS-Service. If the master system or customer controller does not support this service, connecting the CANopen Handheld Address Programmer to the sensor will bypass the service and allow direct setup.

Figure 3. R-Series CANopen Handheld Address Programmer (part no. 252382-D62) Installation Instructions (part no.: 551192)

R-Series CANbus

Model RP profile-style sensor dimension references

MODEL RP, PROFILE-STYLE SENSOR WITH CAPTIVE-SLIDING MAGNET

Drawing is for reference only, contact applications engineering for tolerance specific information.

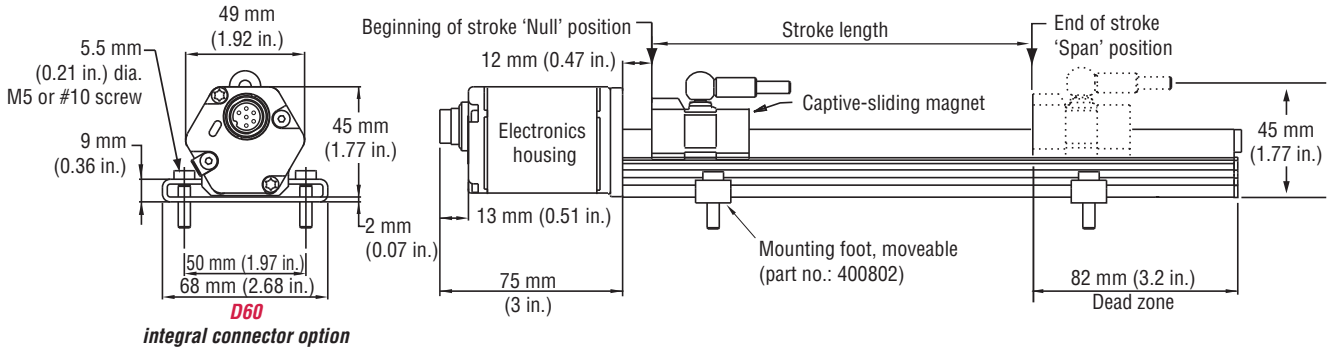

Figure 4. R-Series Model RP Profile-style sensor dimension reference (Shown with the ***D60*** integral connector option)

MODEL RP, PROFILE-STYLE SENSOR WITH OPEN-RING MAGNET

Drawing is for reference only, contact applications engineering for tolerance specific information.

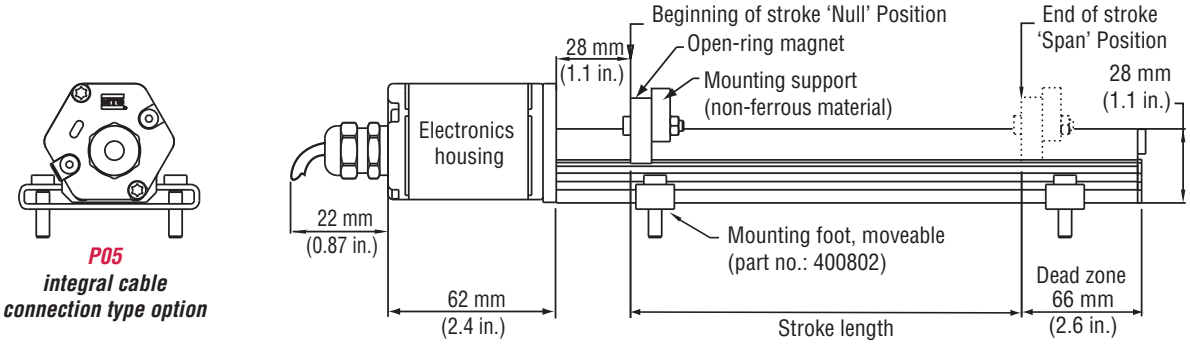

Figure 5. R-Series Model RP Profile-style sensor dimension reference (Shown with the ***P05*** integral cable option)

MODEL RP, PROFILE-STYLE SENSOR WITH CAPTIVE-SLIDING MAGNET

Drawing is for reference only, contact applications engineering for tolerance specific information.

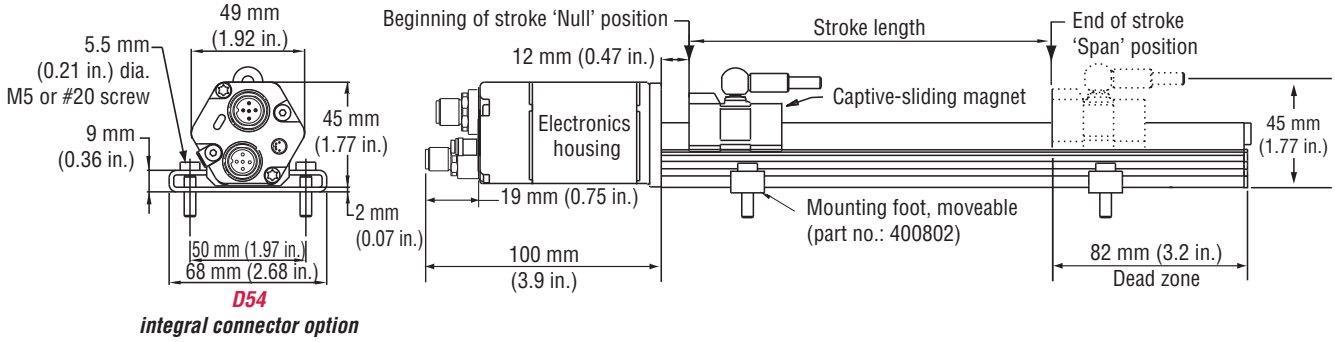

Figure 6. R-Series Model RP Profile-style sensor dimension reference (Shown with the ***D54*** integral connector option)

Standard magnet selections, mounting and installation (Model RP)

SELECTION OF POSITION MAGNETS (ONE MAGNET INCLUDED WITH MODEL RP SENSOR)

Temposonics Model RP profile-style sensors offer two basic mounting methods; side grooves for use with mounting feet or a bottom groove that accepts special T-Slot nuts. Both the mounting feet and T-Slot nuts can be positioned along the sensor extrusion to best secure the sensor for each particular application.

Refer to the Accessories section of this catalog for magnet selections and detailed mounting and installation information.

R-Series CANbus

Model RH rod-style sensor dimension reference

The Temposonics R-Series rod-style sensor (Model RH) offers modular construction, flexible mounting configurations, and easy installation. The Model RH sensor is designed for mounting in applications where high pressure conditions exist, (5000 psi continuous, 10,000 psi spike), such as inside hydraulic cylinders. The Model RH sensor may also be mounted externally in many applications.

Stroke-dependent Dead Zones:

Stroke length:	Dead zone:
25 mm (1 in.) - 5000 mm (197 in.)	63.5 mm (2.5 in.)
5005 mm (197 in.) - 7620 mm (300 in.)	66 mm (2.6 in.)

MODEL RH, ROD-STYLE SENSOR WITH RING MAGNET (MAGNET ORDERED SEPARATELY)

Drawing is for reference only, contact applications engineering for tolerance specific information.

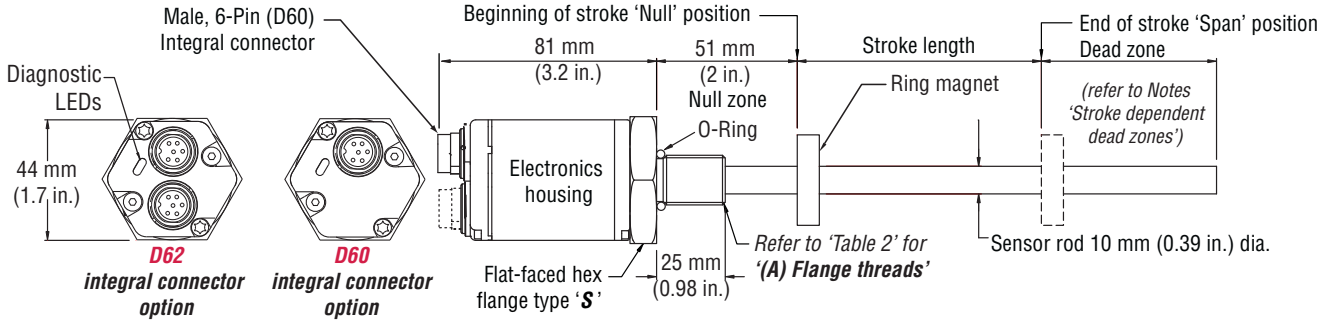

Figure 7. Model RH Rod-style sensor dimension reference (shown with ***D60 / D62*** integral connector options)

MODEL RH, ROD-STYLE SENSOR

Drawing is for reference only, contact applications engineering for tolerance specific information.

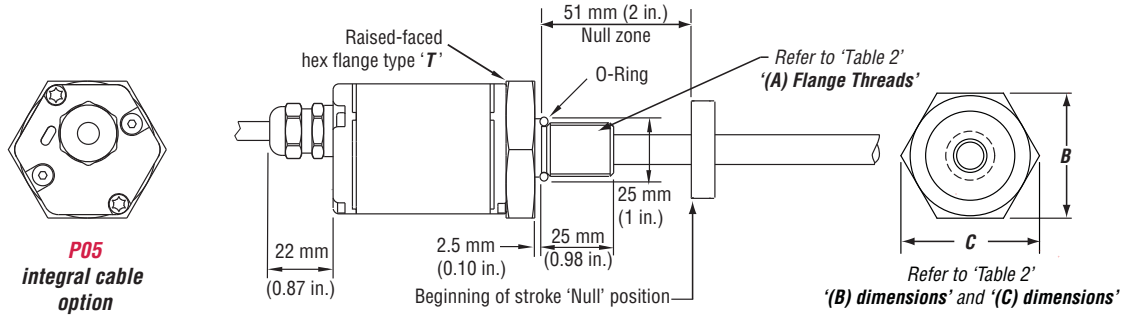

Figure 8. Model RH Rod-style sensor dimension reference (shown with ***P05*** integral cable option)

MODEL RH, ROD-STYLE SENSOR WITH RING MAGNET (MAGNET ORDERED SEPARATELY)

Drawing is for reference only, contact applications engineering for tolerance specific information.

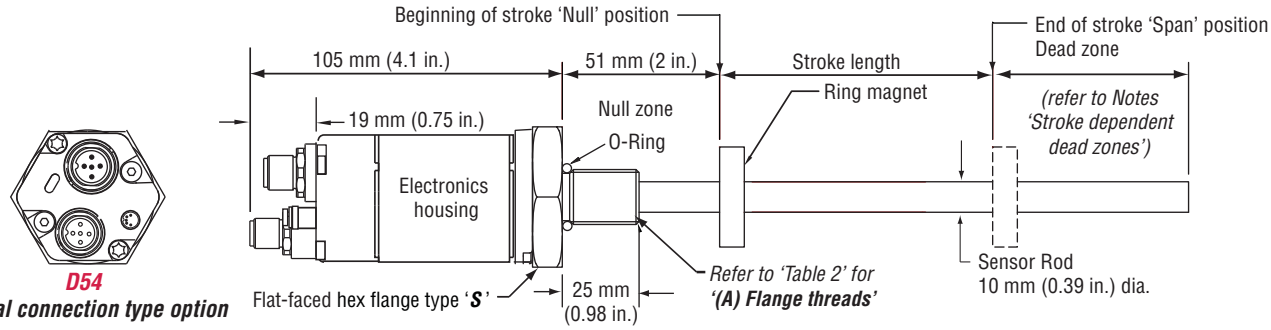

Figure 9. Model RH Rod-style sensor dimension reference (Shown with the ***D54*** Integral cable connection type option)

Housing style Flange type	Description	(A) Flange threads	(B) Dimensions	(C) Dimensions
T	US customary threads with raised-face flange	3/4" - 16 UNF-3A	1.75 in.	2 in.
S	US customary threads with flat-faced flange	3/4" - 16 UNF-3A	1.75 in.	2 in.
M	Metric threads with flat-faced flange	M18 x 1.5	46 mm	53 mm

Table 2. Model RH Rod-style sensor housing style and flange type references

Standard magnets, cable connector selections, mounting and installation (Model RH)

Magnets must be ordered separately with Model RH position sensors. The standard ring magnet (part number 201542-2) is suitable for most applications.

Refer to the Accessories section of this catalog for magnet selections and detailed mounting and installation information.

Connections and wiring

STANDARD MALE (M16) INTEGRAL CONNECTOR FOR SINGLE (D60) AND DUAL (D62) TYPE CONNECTIONS

Male, 6-pin (D60) integral connector pin-out as viewed from the end of the sensor

Pin number	Cable Wire color	Function / CANbus outputs
1	Gray	CAN (-)
2	Pink	CAN (+)
3	Yellow	N.C.
4	Green	N.C.
5	Red or Brown	+24 Vdc (-15/+20%)
6	White	DC ground (for supply)

MALE/FEMALE (M12) INTEGRAL CONNECTORS FOR (D54) TYPE CONNECTIONS

Male, 5-pin (D54) integral connector pin-out as viewed from the end of the sensor

Female, 5-pin (D54) integral connector pin-out as viewed from the end of the sensor

Pin number	Function / CANbus outputs
1	Shield
2	N.C
3	N.C.
4	CAN (+)
5	(CAN (-)

Input voltage, male, 4-pin (D54) integral connector pin-out as viewed from the end of the sensor

Pin number	Cable wire color	Function
1	Brown	+24 Vdc (-15/+20%)
2	White	N.C.
3	Blue	DC ground (for supply)
4	Black	N.C.

Model RP and RH Sensors
Ordering Information

R											1	C									
1	2	3	4	5	6	7	8	9	10	11	12	13	14	15	16	17	18	19	20	21	22

SENSOR MODEL = R 1-2

RP = Profile style **RH** = Hydraulic rod style

HOUSING STYLE = 3

Model RP profile-style sensor (includes one magnet):

S = Captive-sliding magnet with ball joint at top (Part no.: 252182)

V = Captive-sliding magnet with ball joint at front (Part no.: 252184)

M = Open-ring magnet (Part no.: 251416-2)

Model RH rod-style sensor (magnet(s) must be ordered separately):

T = US customary threads, raised-faced flange and pressure tube, standard

S = US customary threads, flat-faced flange and pressure tube, standard

M = Metric threads, flat-faced flange and pressure tube, standard

U = Same as option "T", except uses fluoroelastomer seals for the electronics housing

H = Same as option "S", except uses fluoroelastomer seals for the electronics housing

V = Same as option "M", except uses fluoroelastomer seals for the electronics housing

B = Sensor cartridge only, (no flange and pressure tube, stroke length < 1830 mm (72 in.))

STROKE LENGTH = 4-8

_ _ _ _ **M** = Millimeters
(Encode in 5 mm increments)

_ _ _ . _ **U** = Inches and tenths
(Encode in 0.1 in. increments)

Stroke Length Notes:

1. Profile-style sensor (model RP) stroke range = 25 mm (1 in.) - 5080 mm. (200 in.)
2. Rod-style sensor (model RH) stroke range = 25 mm (1 in.) - 7620 mm (300 in.)

CONNECTION TYPE = 9-11

Integral connector:

D60 = 6-pin DIN (M16), male, standard

D62 = 6-pin DIN (M16), male, dual

D54 = 5-pin DIN (M12), male/female and 4-pin (M8) male

Integral cable:

P _ _ = Integral cable, Orange polyurethane jacket with pigtail termination

Cable length:
Encode in feet if using US customary stroke length
Encode in meters if using metric stroke length

_ _ = 3 (**03**) to 98 (**98**) ft. *or* 1 (**01**) to 30 (**30**) meters.

Cable Length Note:

MTS recommends the maximum integral cable length to be 10 meters (33 ft.). Cables greater than 10 m (33 ft.) in length are available, however, proper care must be taken during handling and installation.

INPUT VOLTAGE = 1 12

1 = +24 Vdc (+20% - 15%)

OUTPUT *(13 - 19)* = C 13-19

C _ _ _ _ _ _ *= CANbus output - Enter the 6 digit output code (1-6) defined by the following selections*
[1] [2] [3] [4] [5] [6]

[1] [2] [3] Protocol		[4] Baud rate		{5] Resolution		{6] Type	
101	= CANbasic (MTS)	**1**	= 1000 kBit/s	**1**	= 0.005 mm (0.0002 in.)	**1**	= Standard
207	= Multi-position measurement	**2**	= 500 kBit/s	**2**	= 0.002 mm (0.00008 in.)		
304	= CANopen	**3**	= 250 kBit/s				
504	= CANopen with Linearity Correction Option (LCO)	**4**	= 125 kBit/s				

NUMBER OF MAGNETS ***(20- 22) FOR MULTI-POSITION MEASUREMENT ONLY*** = Z 20-22

Z *+ Enter a 2 digit code*

Z _ _ *= Enter range (02 - 20) 20 magnets maximum*

R-Series CANbus

Temposonics®

Magnetostrictive, Absolute, Non-contact
Linear-Position Sensors

R-Series Models RP and RH

DeviceNet Output

Data Sheet

Document Part Number
550651 Revision F

Model RP Profile-style position sensor

Model RH Rod-style position sensor

FEATURES

- Linear, Absolute Measurement
- LEDs For Sensor Diagnostics
- Superior Accuracy, Resolution down to 2 µm
- Non-Contact Sensing Technology
- Linearity Deviation Less Than 0.01%
- Repeatability Within 0.001%
- Direct DeviceNet Output

BENEFITS

- Rugged Industrial Sensor
- Cost-effective Communications Network linking Industrial Measurement and Control Devices
- Interface Up to 64 Devices using one cable

APPLICATIONS

- Continuous Operation In Harsh Industrial Conditions
- High Pressure Conditions

TYPICAL INDUSTRIES

- Factory Automation
- Fluid Power
- Plastic Injection and Blow Molding
- Material Handling and Packaging

R-Series DeviceNet

Product overview

R-Series model RH and RP sensors are extremely robust and are ideal for continuous operation under harsh industrial conditions.

MTS offers two standard sensor housings, rod and profile extrusion. The rod housing is capable of withstanding high pressures such as those found in hydraulic cylinders.

The profile extrusion housing provides convenient mounting options and captive sliding magnets which utilize slide bearings of special material that reduce friction, and help mitigate dirt build up. The sensor head contains the active signal conditioning and a complete integrated electronics interface. Double shielding is used to ensure EMI protection for unsurpassed reliability and operating safety.

Controller Area Network (CAN) is a standard for device level communications and the foundation of fieldbus systems like DeviceNet, CANopen and CANbus.These fieldbus systems can provide high speed transmission appropriate for position indication and for motion control in industrial applications.

DeviceNet allows users to interface up to 64 devices using a single cable, thus eliminating the need for conventional methods of multiple wire runs. DeviceNet provides a way to define how, and in which priority, data will be transmitted over the network. The result is a lower complexity, cost-effective communications network linking industrial measurement and control devices. Together, the open DeviceNet protocol and the MTS "smart" R-Series sensors offer an effective, high-precision data transfer system that is well suited for industrial automation.

Product specifications

Parameters	Specifications
OUTPUT	
Measured output variable:	Position
Resolution:	2 µm or 5 µm
Update times:	0.5 ms up to 1200 mm, 1.0 ms up to 2400 mm, 2.0 ms up to 4800 mm, 4.0 ms up to 7600 mm stroke length
Linearity deviation:	< ± 0.01% full stroke (minimum ± 40 µm)
Repeatability:	< ± 0.001% full stroke (minimum ± 2.5 µm)
Hysteresis:	< 4 µm
Output:	**Interface:** CAN-Fieldbus system ISO DIS 11898 **Data protocol DeviceNet release 2.0**
Baud rate, kBit/s:	500 250 125
Cable length, m:	<100 <250 <500
	Sensors will be supplied with ordered Baud rate which can be changed by the customer.
Stroke length:	**Range (Profile style):** 25 mm to 5080 mm (1 in. to 200 in.) **Range (Rod style):** 25 mm to 7620 mm (1 in. to 300 in.)
ELECTRONICS	
Operating voltage:	**+24 Vdc nominal:** -15% or +20%* **Polarity protection:** up to -30 Vdc **Overvoltage protection:** up to 36 Vdc **Current drain:** 90 mA typical **Dielectric withstand voltage:** 500 Vdc (DC ground to machine ground)

Parameters	Specifications
ENVIRONMENTAL	
Operating conditions:	**Operating temperature:** -40 °C (-40 °F) to +75 °C (+167 °F) **Relative humidity:** 90% no condensation **Temperature coefficient:** 15 ppm/ °C
EMC test:	**Electromagnetic emission:** IEC/EN 50081-1 **Electromagnetic susceptibility:** IEC/EN 50082-2, IEC/EN 61000-4-2/3/4/6, level 3/4 criterium A, CE qualified
Shock rating:	100 g (single hit)/IEC standard 68-2-27 (survivability)
Vibration rating:	15 g / 10 to 2000 Hz / IEC standard 68-2-6
WIRING	
Connection type:	5-pin male D51 DeviceNet connector
PROFILE STYLE SENSOR (MODEL RP)	
Electronic head:	Aluminum housing with diagnostic LED display (LEDs located beside connector/ cable exit)
Sealing:	IP 65**
Sensor extrusion:	Aluminum (Temposonics profile style)
Mounting:	Any orientation. Adjustable mounting feet or T-slot nut (M5 threads) in bottom groove
Magnet types:	Captive-sliding magnet or open-ring magnet
ROD STYLE SENSOR (MODEL RH)	
Electronic head:	Aluminum housing with diagnostic LED display (LEDs located beside connector/ cable exit)
Sealing:	IP 67 or IP 68 for integral cable models**
Sensor rod:	304L stainless steel
Operating pressure:	350 bar static, 690 bar peak (5000 psi static, 10,000 psi peak)
Mounting:	Any orientation. Threaded flange M18 x 1.5 or 3/4 - 16 UNF-3A
Typical mounting torque:	45 N-m (33 ft. - lbs.)
Magnet types:	Ring magnet, open-ring magnet, or magnet float

* UL Recognition requires an approved power supply with energy limitation (UL 61010-1), or Class 2 rating according to the National Electrical Code (USA) / Canadian Electrical Code.

** The IP rating is not part of the UL Recognition.

R-Series DeviceNet

Enhanced monitoring and diagnostics

SENSOR STATUS AND DIAGNOSTIC DISPLAY

Integrated diagnostic LEDs (green/red), located beside sensor connector *(see 'Figure 1')*, provide basic visual monitoring for normal sensor operation and DeviceNet communications. Diagnostic display LEDs indicate two modes, Network and Module status as described in *'Table 1'*.

Figure 1. R-Series sensor Integrated diagnostic LEDs

Network Status LED	Operation status/mode
Green	Normal function (operation mode)
Green Flashing	Waiting for instructions from DeviceNet master
Red	Initialization error
Red Flashing	No answer from DeviceNet master

Module Status LED	Operation status/mode
Green	Normal function (operation mode)
Red	Magnet not detected

Table 1. Diagnostic display indicator modes

DeviceNet protocol

R-Series models RP and RH linear-position sensors as slave devices fulfill all requirements of the CANbus (ISO 11898) standard. The sensors electronics and integrated software implement the DeviceNet protocol to convert the displacement measurements into bus oriented outputs and transfer this data directly to the controller.The DeviceNet protocol is appropriate for serial data transfer up to 500 kBit/sec.

When using the DeviceNet protocol with R-series sensors, functionality always includes but is not limited to the following:

- Position
- Error Detection
- Polling & bit-strobe communications modes

PLUG AND PLAY

R-Series sensors with DeviceNet output can be directly connected to a DeviceNet network. The plug and play design makes installation quick and easy. The sensor acts as a "slave" device that transmits its position and status data upon request to the "master" device such as a PLC or IPC. After initial system configuration, the user is not required to have extensive knowledge concerning network timing and sensor technology to execute operations within DeviceNet environment. Sensor-specific parameters are installed into the network using the Electronic Data Sheet (EDS). To obtain the EDS, go to www.mtssensors.com.

There are only two programmable parameters, which are, the node identifier and the baud rate. If desired, a PC programming tool, such as DeviceNet Manager offered by Allen Bradley, can be used to change their values. **The node identifier is factory set at node 63.**

The selected baud rate is shown in the sensor's model number. Note that the sensor will only be recognized on a network running at the same baud rate.

Model RP profile-style sensor dimension references

MODEL RP, PROFILE-STYLE SENSOR WITH CAPTIVE-SLIDING MAGNET

Drawing is for reference only, contact applications engineering for tolerance specific information.

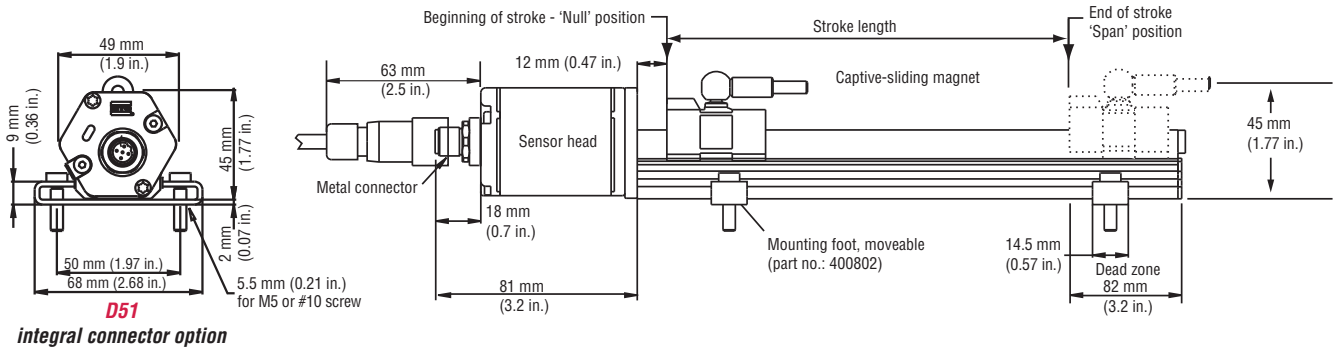

Figure 2. R-Series Model RP Profile-style sensor dimension reference (Shown with the ***D51*** integral connector option)

MODEL RP, PROFILE-STYLE SENSOR WITH OPEN-RING MAGNET

Drawing is for reference only, contact applications engineering for tolerance specific information.

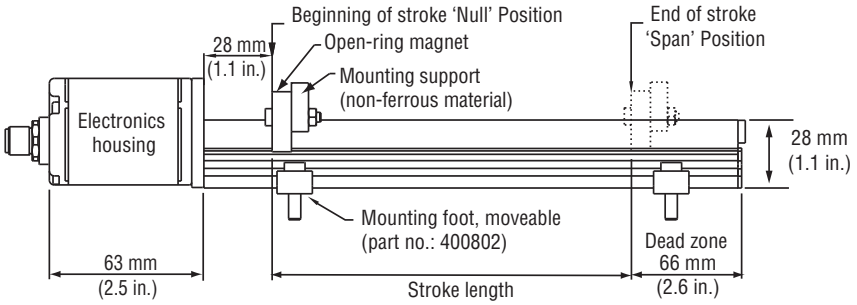

Figure 3. R-Series Model RP Profile-style sensor dimension reference (Shown with the ***D51*** integral connector option)

Standard magnet selections, mounting and installation (Model RP)

SELECTION OF POSITION MAGNETS (ONE MAGNET INCLUDED WITH MODEL RP SENSOR)

Temposonics Model RP profile-style sensors offer two basic mounting methods; side grooves for use with mounting feet or a bottom groove that accepts special T-Slot nuts. Both the mounting feet and T-Slot nuts can be positioned along the sensor extrusion to best secure the sensor for each particular application.

Refer to the Accessories section of this catalog for magnet selections and detailed mounting and installation information.

Model RH rod-style sensor dimension reference

The Temposonics R-Series rod-style sensor (Model RH) offers modular construction, flexible mounting configurations, and easy installation. The Model RH sensor is designed for mounting in applications where high pressure conditions exist, (5000 psi continuous, 10,000 psi spike), such as inside hydraulic cylinders. The Model RH sensor may also be mounted externally in many applications.

Stroke-dependent Dead Zones:	
Stroke length:	**Dead zone:**
25 mm (1 in.) - 5000 mm (197 in.)	63.5 mm (2.5 in.)
5005 mm (197 in.) - 7620 mm (300 in.)	66 mm (2.6 in.)

MODEL RH, ROD-STYLE SENSOR WITH RING MAGNET (MAGNET ORDERED SEPARATELY)

Drawing is for reference only, contact applications engineering for tolerance specific information.

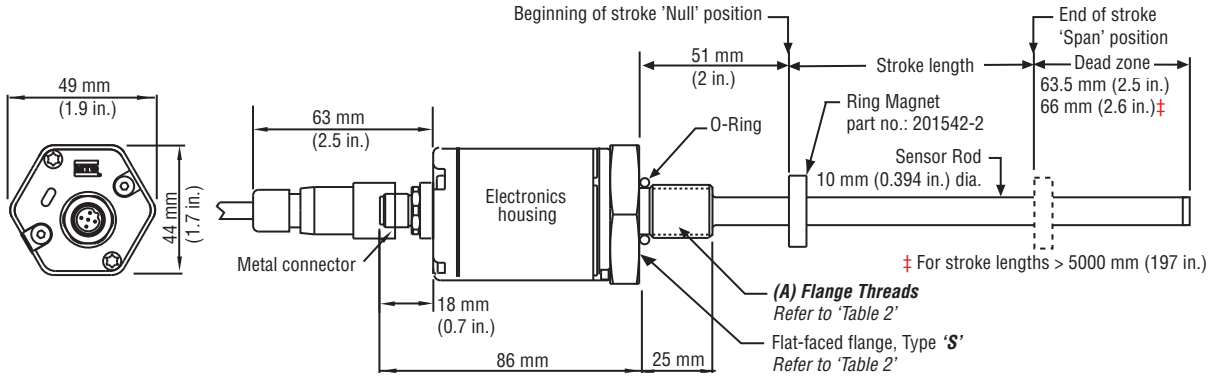

Figure 4. Model RH Rod-style sensor dimension reference (shown with ***D51*** integral connector options)

R-Series DeviceNet

MODEL RH, ROD-STYLE SENSOR WITH RING MAGNET (MAGNET ORDERED SEPARATELY)

Drawing is for reference only, contact applications engineering for tolerance specific information.

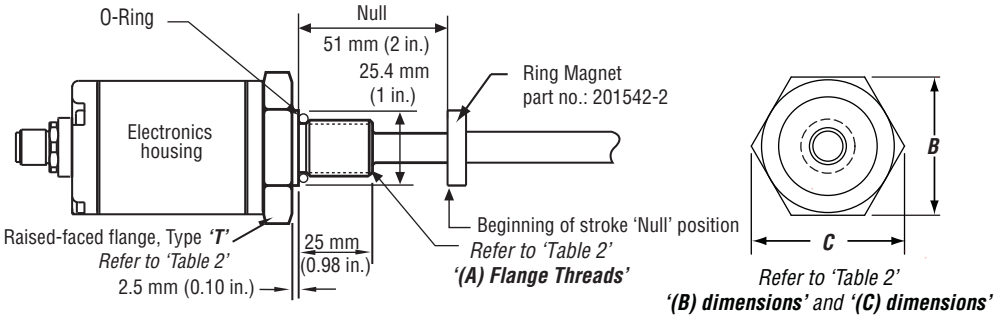

Figure 5. Model RH Rod-style sensor dimension reference (shown with ***D51*** integral connector option)

Housing style Flange type	Description	(A) Flange threads	(B) Dimensions	(C) Dimensions
T	US customary threads with raised-face flange	3/4" - 16 UNF-3A	1.75 in.	2 in.
S	US customary threads with flat-faced flange	3/4" - 16 UNF-3A	1.75 in.	2 in.
M	Metric threads with flat-faced flange	M18 x 1.5	46 mm	53 mm

Table 2. Model RH Rod-style sensor housing style and flange type references

Standard magnet selections, mounting and installation (Model RH)

Magnets must be ordered separately with Model RH position sensors. The standard ring magnet (part number 201542-2) is suitable for most applications.

Refer to the Accessories section of this catalog for magnet selections and detailed mounting and installation information.

Connections and wiring

CABLE CONNECTOR (FIELD INSTALLED FEMALE MICRO DEVICENET)

Male, 5-pin (DeviceNet micro connector)pin-out as viewed from the end of the sensor

Pin number	Function / DeviceNet outputs
1	Shield
2	+24 Vdc (+20% / -15%)
3	DC ground (for supply)
4	CAN (+)
5	CAN (-)

CABLE CONNECTOR OPTIONS (FIELD INSTALLABLE) 5-PIN DIN (D51) FEMALE *(Drawing dimensions are for reference only)*

Appropriate grounding of cable shield is required at the controller end. Molded extenssion cables are available from third-party vendors.

Connector and connector dimensions	Description	Part number
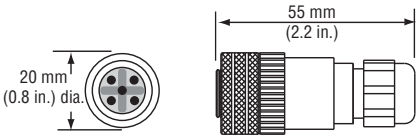	**Female Cable Connector, Straight Exit (D51) (Field installable)** 5-Pin micro DeviceNet connector mates with male (D51) connection type	370375
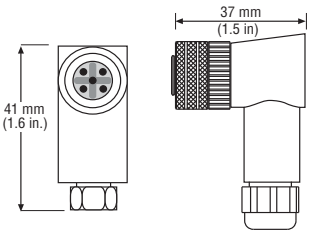	**Female Cable Connector, 90° exit, (D51) (Field installable)** 5-Pin micro DeviceNet connector mates with male (D51) connection type	370376

R								D	5	1	1	C	2	0	2			1
1	2	3	4	5	6	7	8	9	10	11	12	13	14	15	16	17	18	19

SENSOR MODEL = R _ **1-2**

RP = Profile style
RH = Hydraulic rod style

HOUSING STYLE = _ **3**

Model RP profile-style sensor (includes one magnet):

S = Captive-sliding magnet with ball joint at top (Part no. 252182)
V = Captive-sliding magnet with ball joint at front (Part no. 252184)
M = Open-ring magnet (Part no. 251416-2)

Model RH rod-style sensor (magnet(s) must be ordered separately):

T = US customary threads, raised-faced flange and pressure tube, standard
U = Same as option 'T', except uses fluoroelastomer seals for the electronics housing
B = Sensor cartridge only (no flange and pressure tube, stroke length < 1830 mm (72 in.))
S = US customary threads, flat-faced flange and pressure tube, standard
H = Same as option 'S', except uses fluoroelastomer seals for the electronics housing
M = Metric threads, flat-faced flange and pressure tube, standard
V = Same as option 'M', except uses fluoroelastomer seals for the electronics housing

STROKE LENGTH = _ _ _ _ _ **4-8**

_ _ _ _ **M** = Millimeters
(Encode in 5 mm increments)

_ _ _ . _ **U** = Inches and tenths
(Encode in 0.1 in. increments)

Stroke Length Notes:

1. Profile-style sensor (model RP) stroke range = 25 mm (1 in.) - 5080 mm. (200 in.)
2. Rod-style sensor (model RH) stroke range = 25 mm (1 in.) - 7620 mm (300 in.)

CONNECTION TYPE = D 5 1

Integral connector:

D51 = 5-pin Micro DeviceNet, male, standard

INPUT VOLTAGE = 1 **12**

1 = +24 Vdc (+20% - 15%)

OUTPUT *(13 - 19)* = C _ _ _ _ _ _ **13-19**

C _ _ _ _ _ _ = *CANbus output - Enter the 6 digit output code (1-6) defined by the following selections*
[1] [2] [3] [4] [5] [6]

[1] [2] [3] Protocol
202 = DeviceNet

[4] Baud rate
2 = 500 kBit/s
3 = 250 kBit/s
4 = 125 kBit/s

[5] Resolution
1 = 5 µm (0.0002 in.)
2 = 2 µm (0.00008 in.)

[6] Type
1 = Standard

R-Series DeviceNet

Temposonics®

Magnetostrictive, Absolute, Non-contact
Linear-Position Sensors

R-Series Models RP and RH

Profibus-DP Output

Data Sheet

Document Part Number
550990 Revision D

Model RP Profile-style position sensor **Model RH Rod-style position sensor**

FEATURES

- Linear, Absolute Measurement
- LEDs For Sensor Diagnostics
- Superior Accuracy, Resolution down to 1 µm
- Non-Contact Sensing Technology
- Linearity Deviation Less Than 0.01%
- Repeatability Within 0.001%
- Direct Profibus-DP Output (Position +Velocity)
- Standard and Multi-magnet position measurements (up to 20 positions per sensor)

BENEFITS

- Rugged Industrial Sensor
- Fullfills All Requirements of Profibus-DP (EN 50170) Protocol
- Profibus-DP Provides Powerful Functions for Diagnostics and Configuration
- Linearity Correction Options

APPLICATIONS

- Continuous Operation In Harsh Industrial Conditions
- High Pressure Conditions
- For Accurate, Multi-Magnet Position Measurement (up to 20 positions per sensor)

TYPICAL INDUSTRIES

- Factory Automation
- Fluid Power
- Plastic Injection and Blow Molding
- Material Handling and Packaging

Product overview

R-Series model RH and RP sensors are extremely robust and are ideal for continuous operation under harsh industrial conditions. MTS offers two standard sensor housings, rod and profile extrusion. The rod housing is capable of withstanding high pressures such as those found in hydraulic cylinders. The profile extrusion housing provides convenient mounting options and captive sliding magnets which utilize slide bearings of special material that reduce friction, and help mitigate dirt build up. The sensor head contains the active signal conditioning and a complete integrated electronics interface. Double shielding is used to ensure EMI protection for unsurpassed reliability and operating safety.

Temposonics R-Series models RP and RH linear-position sensors fulfill all requirements of Profibus-DP (EN 50170) protocol. They also provide absolute position data to Profibus control units by using a serial, bit synchronous, RS-485 format at a baud rate up to 12 Mbps maximum.

In addition to data transmission, Profibus-DP provides powerful functionality for diagnostics and configuration, which is loaded into the bus using the GSD electronic device data sheet file. The downloadable .gsd file for Temposonics Profibus model sensors is available at http://www.mtssensors.com.

Product specifications

Parameters	Specifications
OUTPUT	
Measured output variables:	Position, up to 20 magnet positions simultaneously Position + Velocity, up to 5 magnets simultaneously
Resolution:	1 µm, other values are selectable when using the .gsd file
Update times:	0.5 ms at 500 mm, 1 ms at 2000 mm, 2 ms at 4500 mm, 3.1 ms at 7600 mm stroke length. For each additional magnet add 0.05 ms,. Add 0.03 ms for approximate values for velocity measurements.
Linearity deviation:	< ± 0.01% full stroke (minimum ± 50 µm) *(Linearity Correction Option (LCO) available)*
Repeatability:	< ± 0.001% full stroke (minimum ± 2.5 µm)
Hysteresis:	< 4 µm
Outputs:	**Interface:** Profibus-DP system ISO 74498 **Data format:** Profibus-DP (EN 50 170)
Data transmission rates:	12 MBd 1.5 MBd 500 kBd 187.5 kBd ≤93.75 kBd
Cable length, m:	<100 <200 <400 <1000 <1200
Stroke length:	**Range (Profile style):** 25 mm to 5080 mm (1 in. to 200 in.) **Range (Rod style):** 25 mm to 7620 mm (1 in. to 300 in.)
ELECTRONICS	
Operating voltage:	**+24 Vdc nominal:** -15% or +20%* **Polarity protection:** up to -30 Vdc **Over voltage protection:** up to 36 Vdc **Current drain:** 90 mA typical **Dielectric withstand voltage:** 500 Vdc (DC ground to machine ground)

Parameters	Specifications
ENVIRONMENTAL	
Operating conditions:	**Operating temperature:** -40 °C (-40 °F) to 75 °C (167 °F) **Relative humidity:** 90% no condensation **Temperature coefficient:** < 15 ppm/ °C
EMC test:	**Electromagnetic emission:** IEC/EN 50081-1 **Electromagnetic susceptibility:** IEC/EN 50082-2, IEC/EN 61000-4-2/3/4/6, level 3/4 criterium A, CE qualified
Shock rating:	100 g (single hit)/IEC standard 68-2-27 (survivability)
Vibration rating:	15 g / 10 to 2000 Hz / IEC standard 68-2-6
WIRING	
Connection type:	**D63 option:** Two 6-pin (M16) connectors one male and one female **D53 option:** Two 5-pin (M12) connectors one male and one female. plus one 4-pin connector (M8) male
PROFILE STYLE SENSOR (MODEL RP)	
Electronic head:	Aluminum housing with diagnostic LED display (LEDs located beside connectors)
Sealing:	IP 65**
Sensor extrusion:	Aluminum (Temposonics profile style)
Mounting:	Any orientation. Adjustable mounting feet or T-Slot nut (M5 threads) in bottom groove
Magnet types:	Captive-sliding magnet or open-ring magnet
ROD STYLE SENSOR (MODEL RH)	
Electronic head:	Aluminum housing with diagnostic LED display (LEDs located beside connectors)
Sealing:	IP 67**
Sensor rod:	304L stainless steel
Operating pressure:	350 bar static, 690 bar peak (5000 psi static, 10,000 psi peak)
Mounting:	Any orientation. Threaded flange M18x1.5 or 3/4-16 UNF-3A
Typical mounting torque:	45 N-m (33 ft. - lbs.)
Magnet types:	Ring magnet, open-ring magnet, or magnet float

* UL Recognition requires an approved power supply with energy limitation (UL 61010-1), or Class 2 rating according to the National Electrical Code (USA) / Canadian Electrical Code.
** The IP rating is not part of the UL Recognition.

R-Series Profibus

Enhanced monitoring and diagnostics

SENSOR STATUS AND DIAGNOSTIC DISPLAY

Integrated diagnostic LEDs (green/red), located beside sensor connectors *(see 'Figure 1')*, provide basic visual monitoring for normal sensor operation and troubleshooting. diagnostic display LEDs indicate four modes described in *'Table 1'*.

Figure 1. R-Series sensor Integrated diagnostic LEDs

Green	Red	Operation status/mode
ON	OFF	Normal function (operation mode)
ON	ON	Magnet not detected or wrong quantity of magnets
Flashing	OFF	Waiting for master parameters
Flashing	ON	Programming mode

Table 1. Diagnostic display indicator modes

Profibus-DP output parameters

R-Series sensors with Profibus-DP output are compliant with Profibus DP slave class 2 and have the following features:

Selectable outputs:

- Absolute position measurement
- Velocity measurement
- Sensor Status
- Error detection (e.g. magnet status)

Selectable parameters:

- Offset / preset for each magnet
- Measuring direction; forward and reverse acting
- Intel® and Motorola® data format transfers

OPERATION MODES

R-Series sensors with Profibus-DP protocol provide the following single or multi-magnet measurements:

Standard measurement (P102 output code):

- Position (using one magnet)

Multi-magnet measurement (P101 output code):

- Position (using up to 20 magnets simultaneously)

Multi-magnet measurement (P103 output code):

- Position + velocity (using up to 5 magnets simultaneously)

When using multiple magnets, the minimum allowed distance between magnets is 75 mm (3. in.) to maintain proper sensor output *(see 'Figure 2')*.

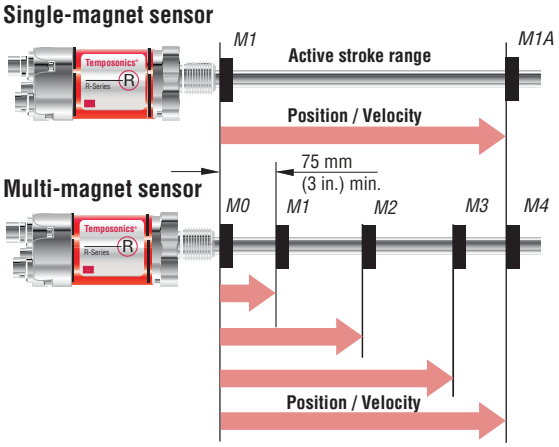

Figure 2. Single and multi-magnet output diagram

Profibus-DP communication and functionality

DATA EXCHANGE

For multi-magnet measurement, 1 status byte and 3 bytes of position data for each position are transmitted. The status byte contains an error bit and the position number for the following measurement value. Dependent on sensor parameters, sensor data can be transferred in different data formats, (e.g. Intel® or Motorola®)

Note: Factory default node address = 125 (7D hex)

LINEARITY CORRECTION OPTION (LCO)

The Linearity Correction Option (LCO) provides improved sensor output accuracy. For most stroke lengths linearity accuracy is improved up to a factor of 5, resulting in deviations from actual position of less than ± 20 microns (0.0008 in.). For stroke lengths over 5000 mm (197 in.) the linearity accuracy is improved up to a factor of 10. Selecting the sensor style and magnet is important (both must be matched together). Contact the factory for assistance when designing for the LCO in your application.

Profibus-DP handheld address programmer

The *Profibus-DP Handheld Address Programmer (see 'Figure 3')* is offered as an accessory used to setup the *Slave Address* via the Profibus-DP interface. Addressing is usually performed by the Profibus-DP SetSlaveAddress command. If the master system or controller does not support this service, connecting the Profibus-DP Handheld Address Programmer to the sensor will bypass the service and allow direct setup. Default Node ID is 125 (7D Hex).

When ordering the *Profibus-DP Node and Field Address Programmer* accessory, for D53 and D63 style connections, order part no.: 280640. The Profibus-DP Node and Address Programmer Installation instructions (document part no.: 551193) is available in PDF format at http://www.mtssensors.com.

Figure 3. R-Series Profibus-DP Handheld Address Programmer, part no.: 280640

Programming accessory	Function	Part number
Profibus handheld address programmer	For sensors with the D63 connection type	280640
Profibus handheld address programmer	For sensors with the D53 connection type	280640
Profibus master simulator	Check sensor operation using Bihl + Wiedemann, Model 1131	401727
Master simulator cable	For sensors with the D63 connection type	401726
Master simulator cable	For sensors with the D53 connection type	252383
Profibus noise filter box	Junction box with noise filter for connecting 24 Vdc input power on to the bus when using the hybrid Profibus cable, (D63 connection type).	252916

Model RP profile-style sensor dimension references

MODEL RP, PROFILE-STYLE SENSOR WITH STYLE S CAPTIVE-SLIDING MAGNET

Drawing is for reference only, contact applications engineering for tolerance specific information.

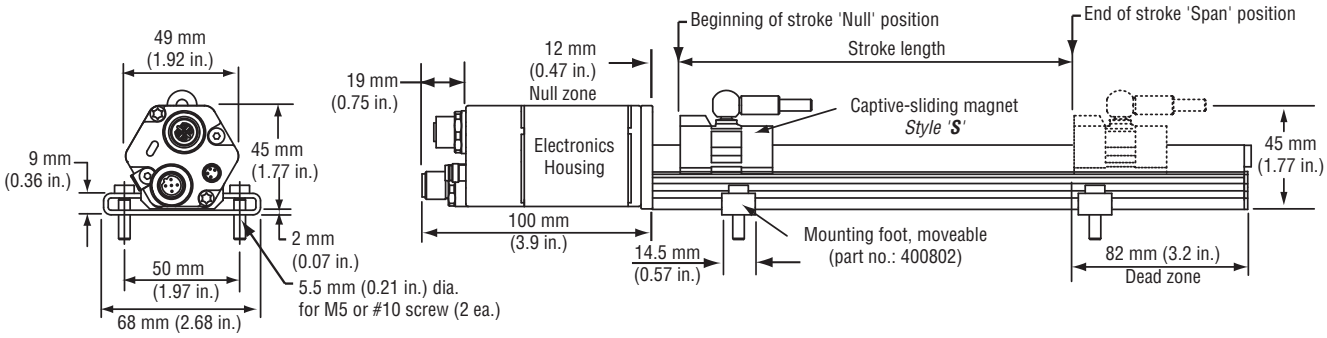

D53 Connector option

Figure 4. R-Series Model RP Profile-style sensor dimension reference (Shown with the ***D53*** connector option)

MODEL RP, PROFILE-STYLE SENSOR WITH STYLE M OPEN-RING MAGNET

Drawing is for reference only, contact applications engineering for tolerance specific information.

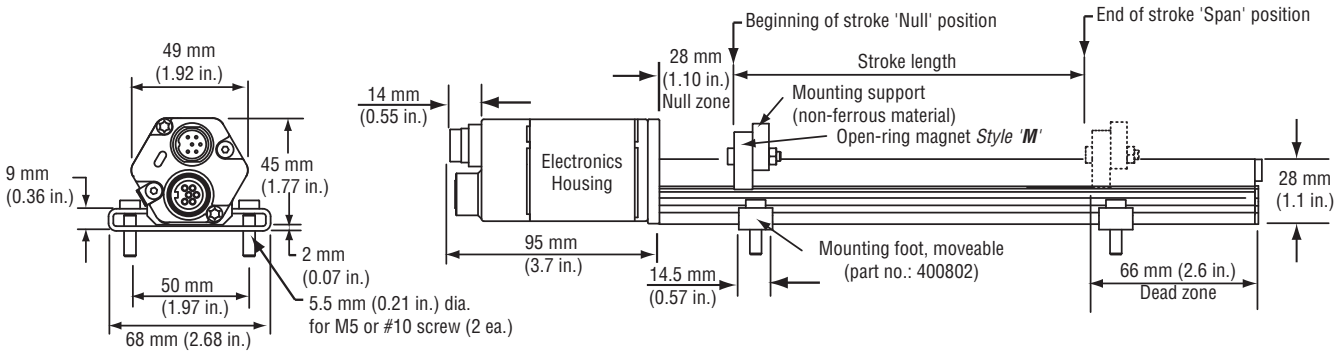

D63 Connector option

Figure 5. R-Series Model RP Profile-style sensor dimension reference (Shown with the ***D63*** connector option)

R-Series Profibus

MODEL RP, PROFILE-STYLE SENSOR WITH STYLE V CAPTIVE-SLIDING MAGNET *Drawing is for reference only, contact applications engineering for tolerance specific information.*

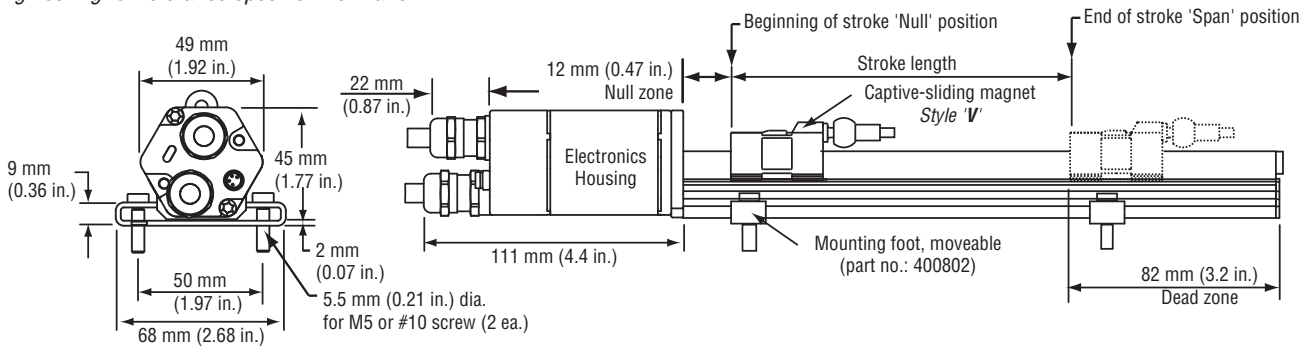

A05 Integral cable option

Figure 6. R-Series Model RP Profile-style sensor dimension reference (Shown with the ***A05*** integral cable option)

Standard magnet selections, mounting and installation (Model RP)

SELECTION OF POSITION MAGNETS (ONE MAGNET INCLUDED WITH MODEL RP SENSOR)

Temposonics Model RP profile-style sensors offer two basic mounting methods; side grooves for use with mounting feet or a bottom groove that accepts special T-Slot nuts. Both the mounting feet and T-Slot nuts can be positioned along the sensor extrusion to best secure the sensor for each particular application.

Refer to the Accessories section of this catalog for magnet selections and detailed mounting and installation information.

Model RH rod-style sensor dimension reference

The Temposonics R-Series rod-style sensor (Model RH) offers modular construction, flexible mounting configurations, and easy installation. The Model RH sensor is designed for mounting in applications where high pressure conditions exist (5000 psi continuous, 10,000 psi spike), such as inside hydraulic cylinders. The Model RH sensor may also be mounted externally in many applications.

Stroke-dependent Dead Zones:

Stroke length:	Dead zone:
25 mm (1 in.) - 5000 mm (197 in.)	63.5 mm (2.5 in.)
5005 mm (197 in.) - 7620 mm (300 in.)	66 mm (2.6 in.)

MODEL RH, ROD-STYLE SENSOR DIMENSION REFERENCE

Drawing is for reference only, contact applications engineering for tolerance specific information.

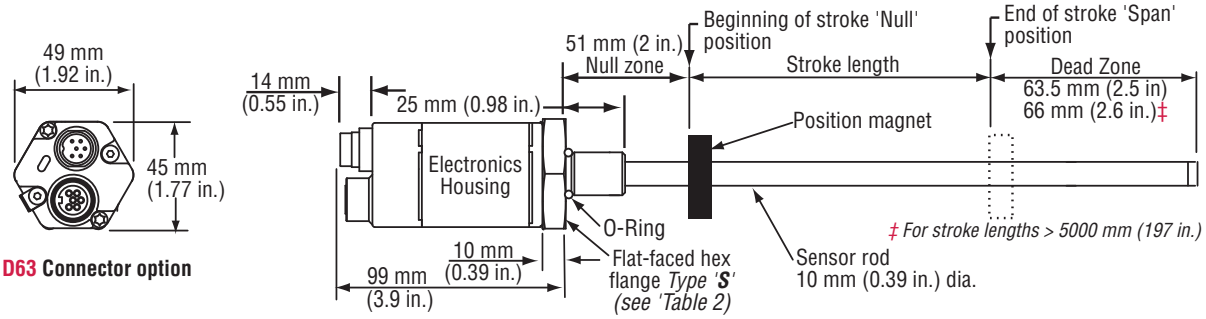

D63 Connector option

Figure 7. Model RH Rod-style sensor dimension reference (shown with ***D63*** connector option)

R-Series Profibus

Model RH rod-style sensor dimension reference (Cont.)

MODEL RH, ROD-STYLE SENSOR WITH RING MAGNET (MAGNET ORDERED SEPARATELY)
Drawing is for reference only, contact applications engineering for tolerance specific information.

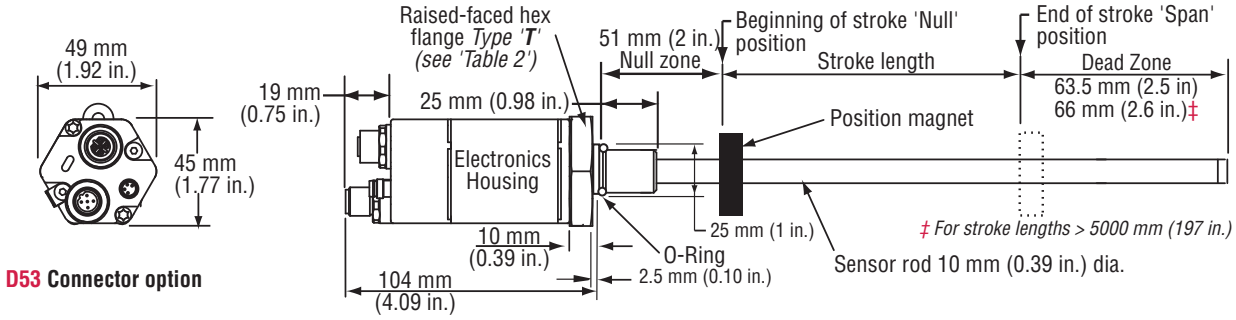

Figure 8. Model RH Rod-style sensor dimension reference (shown with ***D53*** connector option)

MODEL RH, ROD-STYLE SENSOR WITH RING MAGNET (MAGNET ORDERED SEPARATELY)
Drawing is for reference only, contact applications engineering for tolerance specific information.

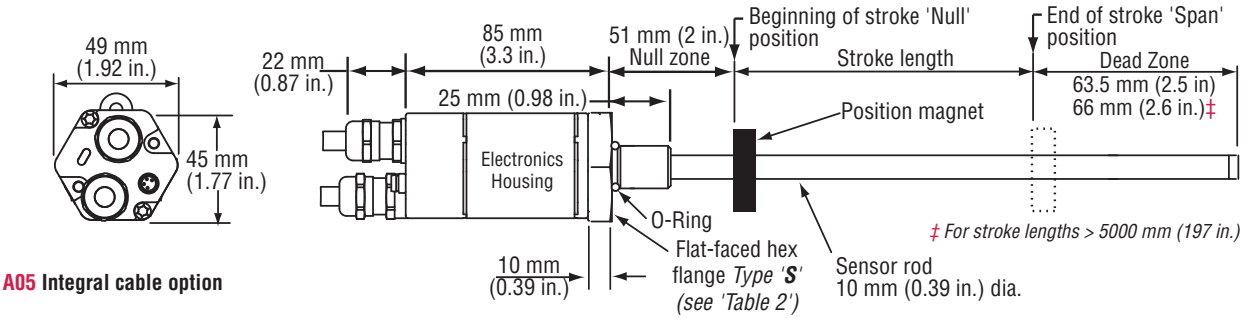

Figure 9. Model RH Rod-style sensor dimension reference (Shown with the ***A05*** Integral cable connection type option)

Housing style Flange type	Description	(A) Flange threads	(B) Dimensions	(C) Dimensions
T	US customary threads with raised-face flange	3/4" - 16 UNF-3A	1.75 in.	2 in.
S	US customary threads with flat-faced flange	3/4" - 16 UNF-3A	1.75 in.	2 in.
M	Metric threads with flat-faced flange	M18 x 1.5	46 mm	53 mm

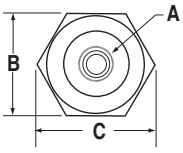

Table 2. Model RH Rod-style sensor housing style and flange type references

Standard magnet selections, mounting and installation (Model RH)

Magnets must be ordered separately with Model RH position sensors. The standard ring magnet (part number 201542-2) is suitable for most applications.

Refer to the Accessories section of this catalog for magnet selections and detailed mounting and installation information.

R-Series Profibus

Connection and wiring options

BUS / INPUT VOLTAGE CONNECTION OPTIONS (DAISY-CHAIN TOPOLOGIES)

(D63) CONNECTOR OPTION

The shielded hybrid cable (5 wires; two bus, two power supply and 1 machine ground, part no.: 530040) is used for both bus and supply voltage (D63) connections. This provides convenient daisy-chain connections for applications with multiple Profibus-DP sensors.

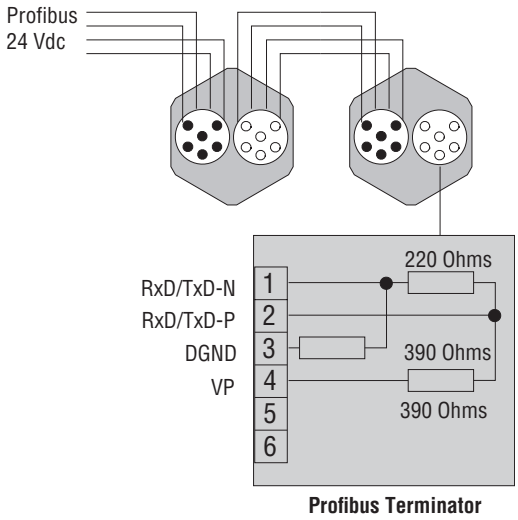

(D53) CONNECTOR OPTION

For (D53) connection types, a separate 4-pin connector and cable is used for the supply voltage.

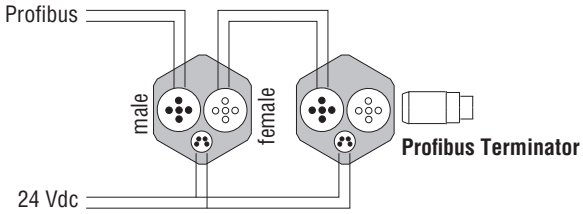

(D53) CONNECTOR OPTION WITH THE 'T' CONNECTOR

A 'T' connector is used with the separate bus cable to enable the bus to remain active when a sensor is disconnected.

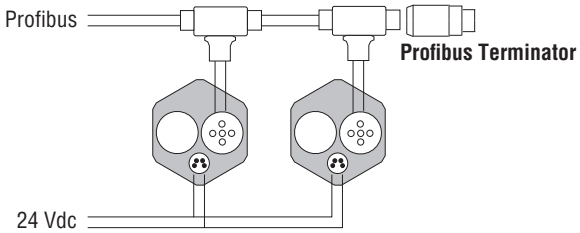

Bus connector option (D63)

(D63) BUS CONNECTOR OPTION PINOUTS/FUNCTIONS

***D63* Male**
6-pin outlet

***D63* Female**
6-pin outlet

MALE/FEMALE, 6-PIN (D63) INTEGRAL CONNECTOR OPTION FOR SHIELDED HYBRID CABLE FOR BUS AND INPUT VOLTAGE

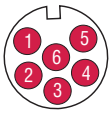

Male, 6-pin (M16) integral connector pin-out as viewed from the end of the sensor

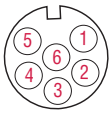

Female, 6-pin (M16) integral connector pin-out as viewed from the end of the sensor

Pin number	Cable wire color	Function
1	Green	RxD/TxD-N (Bus)
2	Red	RxD/TxD-P (Bus)
3	N/A	DGnd (Bus termination) *female connector only*
4	N/A	VP (Bus termination) *female connector only*
5	Black	+24 Vdc (-15/+20%)
6	Blue	DC ground (for supply)
N/A	Yellow/ Green	Shielding, machine ground

R-Series Profibus

Connections and wiring (D53)

(D53) BUS CONNECTOR OPTION PINOUTS/FUNCTIONS

D53
Male, 4-pin
Input voltage

D53
Male
5-pin outlet

D53
Female
5-pin outlet

MALE/FEMALE, 5-PIN (D53) INTEGRAL CONNECTOR OPTION

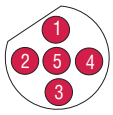

Male, 5-pin (M12) integral connector pin-out as viewed from the end of the sensor

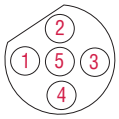

Female, 5-pin (M12) integral connector pin-out as viewed from the end of the sensor

Pin number	Cable wire color	Function
1	N/A	VP+5 (Bus termination) *female connector only*
2	Green	RxD/TxD-N (Bus)
3	N/A.	DGnd (Bus termination) *female connector only*
4	Red	RxxD / TxD-P (Bus)
5	Shield	Shield

(D53) INPUT VOLTAGE INTEGRAL CONNECTOR OPTION

Input voltage, male, 4-pin (M8) integral connector pin-out as viewed from the end of the sensor

Pin number	Wire color	Function
1	Brown	+24 Vdc (-15/+20%)
2	White	No connection
3	Blue	DC ground (for supply)
4	Black	No connection

R-Series Profibus

R										1	P					
1	2	3	4	5	6	7	8	9	10	11	12	13	14	15	16	17	18	19

SENSOR MODEL = R 1-2

RP = Profile style
RH = Hydraulic rod style

HOUSING STYLE = 3

Model RP profile-style sensor (includes one magnet):

S = Captive-sliding magnet with ball joint at top (Part no. 252182)
V = Captive-sliding magnet with ball joint at front (Part no. 252184)
M = Open-ring magnet (Part no. 251416-2)

Model RH rod-style sensor (magnet(s) must be ordered separately):

T = US customary threads, raised-faced flange and pressure tube, standard
U = Same as option "T", except uses fluoroelastomer seals for the electronics housing
B = Sensor cartridge only (no flange and pressure tube, stroke length < 1830 mm (72 in.))

S = US customary threads, flat-faced flange and pressure tube, standard
H = Same as option "S", except uses fluoroelastomer seals for the electronics housing

M = Metric threads, flat-faced flange and pressure tube, standard
V = Same as option "M", except uses fluoroelastomer seals for the electronics housing

STROKE LENGTH = 4-8

_ _ _ _ M = Millimeters
(Encode in 5 mm increments)

_ _ _ . _ U = Inches and tenths
(Encode in 0.1 in. increments)

Stroke Length Notes:

1. Profile-style sensor (model RP) stroke range = 25 mm (1 in.) - 5080 mm. (200 in.)
2. Rod-style sensor (model RH) stroke range = 25 mm (1 in.) - 7620 mm (300 in.)

CONNECTION TYPES = 9-11

Integral connector:

D63 = Two 6-pin DIN (M16), male/female, standard
D53 = Two 5-pin DIN (M12), male/female plus one 4-pin (M8) male

Integral cable:

A _ _ = Integral cable, Hybrid Profibus with pigtail termination

Cable length:
Encode in feet if using US customary stroke length
Encode in meters if using metric stroke length

_ _ = 3 (03) to 98 (98) ft. *or* 1 (01) to 30 (30) meters.

Cable Length Note:

MTS recommends the maximum integral cable length to be 10 meters (33 ft.). Cables greater than 10 m (33 ft.) in length are available, however, proper care must be taken during handling and installation.

INPUT VOLTAGE = 12

1 = +24 Vdc (+20% - 15%)

OUTPUT *(13 - 16)* = P 13-16

P _ _ _
[1] [2] [3] *= Profibus-DP protocol - Enter the 3 digit output code (1-3) defined by the following selections*

[1] [2] [3] Protocol

101 = Multi-magnet (multi-position measurement) max. 20 positions
102 = Single magnet measurement (standard)
103 = Position, velocity (max. 5 positions and 5 velocities)
105 = Multi-magnet, up to 20 magnets with Linearity Correction Option (LCO) (Code P105 replaces codes P201L and P202L)

NUMBER OF MAGNETS ***(17- 19) FOR MULTI-POSITION MEASUREMENT ONLY*** = Z 17-19
Z + Enter a 2 digit code

Z _ _
[1] [2] = If output **P101** or **P202L** is entered, enter a number between (02 - 20).
If output **P103** is entered, enter a number between (02 - 05)
(For multi-position measurements, additional magnets are ordered separately.)

R-Series Profibus

Temposonics®

Magnetostrictive, Absolute, Non-contact
Linear-Position Sensors

R-Series Models RP and RH

EtherCAT® Industrial Ethernet Interface

Data Sheet

MTS SENSORS

Document Part Number
551074 Revision C

Model RP Profile-style position sensor

Model RH Rod-style position sensor

FEATURES

- Linear, Absolute Measurement
- LEDs For Sensor Diagnostics
- Superior Accuracy, Resolution down to 1 µm
- Non-Contact Sensing Technology
- Linearity Deviation Less Than 0.01%
- Repeatability Within 0.001%
- Direct EtherCAT® Interface, Position + Velocity
- 100 µs Position / Velocity Update Time, Regardless of Overall Stroke Length

BENEFITS

- Rugged Industrial Sensor
- Position + Velocity Measurements For Up to 20 Magnets

APPLICATIONS

- Continuous Operation In Harsh Industrial Conditions
- High Pressure Conditions
- For Accurate, High-Speed, Simultaneous Multi-Position and Velocity Measurements

TYPICAL INDUSTRIES

- Factory Automation
- Fluid Power
- Plastic Injection and Blow Molding
- Material Handling and Packaging

R-Series EtherCAT®

EtherCAT® is a registered trademark and patented technology licenced by Beckhoff Automation GmbH, Germany

Product overview

Temposonics R-Series EtherCAT sensors represent MTS Sensors' development and product offering in high-speed networked position feedback. EtherCAT (Ethernet for Control Automation Technology) is a unique interface developed by Beckhoff Automation and is supported by the EtherCAT Technology Group (ETG).

This interface is used for industrial Ethernet, providing the fastest, most deterministic industrial networking solution possible using the base Ethernet physical layer. By using this format, coupled with our high speed networked sensing capability, machine builders and automation engineers will be able to overcome bandwidth and node limitation issues found with other commercially available industrial networks.

Product specifications

Parameters	Specifications
OUTPUT	
Measured output variables:	Simultaneous multi-position and velocity measurements up to 20 magnets or up to 5 magnets when using high-speed update (for EtherCAT distributed clock mode). Option for acceleration measurements up to 2 magnets.
Resolution:	1 to 1000 µm selectable
Update time:	100 µs min. (high speed update feature is active when the controller's loop time is less than the sensor's measurement cycle time)
Linearity deviation:	< ± 0.01% full stroke (minimum ± 50 µm) (Linearity Correction Option (LCO) available)
Repeatability:	< ± 0.001% full stroke (minimum ± 2.5 µm)
Hysteresis:	< 4 µm
Outputs:	**Interface:** EtherCAT **Data format:** EtherCAT 100 Base-Tx, fast Ethernet **Data transmission rate:** 100 Mbit/s max.
Stroke length:	**Range (Profile style):** 25 mm to 5080 mm (1 in. to 200 in.) **Range (Rod style):** 25 mm to 7620 mm (1 in. to 300 in.)
ELECTRONICS	
Operating voltage:	**+24 Vdc nominal:** -15% or +20%* **Polarity protection:** up to -30 Vdc **Over voltage protection:** up to 36 Vdc **Current drain:** 80 mA typical **Dielectric withstand voltage:** 500 Vdc (DC ground to machine ground)

Parameters	Specifications
ENVIRONMENTAL	
Operating conditions:	**Operating temperature:** 0 °C (32 °F) to +75 °C (+167 °F) **Relative humidity:** 90% no condensation **Temperature coefficient:** < 15 ppm/ °C
EMC test:	**Electromagnetic emission:** IEC/EN 50081-1 **Electromagnetic susceptibility:** IEC/EN 50082-2, IEC/EN 61000-4-2/3/4/6, level 3/4 criterium A, CE qualified
Shock rating:	100 g (single hit)/IEC standard 68-2-27 (survivability)
Vibration rating:	15 g / 10 to 2000 Hz / IEC standard 68-2-6
WIRING	
Connection type:	D56 option: Two female 4-pin (M12-D) plus one 4-pin male (M8) connector
PROFILE STYLE SENSOR (MODEL RP)	
Electronic head:	Aluminum housing with diagnostic LED display (LEDs located beside connectors)
Sealing:	IP 65**
Sensor extrusion:	Aluminum (Temposonics profile style)
Mounting:	Any orientation. Adjustable mounting feet or T-slot nut (M5 threads) in bottom groove
Magnet types:	Captive-sliding magnet or open-ring magnet
ROD STYLE SENSOR (MODEL RH)	
Electronic head:	Aluminum housing with diagnostic LED display (LEDs located beside connectors)
Sealing:	IP 67**
Sensor rod:	304L stainless steel
Operating pressure:	350 bar static, 690 bar peak (5000 psi static, 10,000 psi peak)
Mounting:	Any orientation. Threaded flange M18 x 1.5 or 3/4 - 16 UNF-3A
Typical mounting torque:	45 N-m (33 ft. - lbs.)
Magnet types:	Ring magnet, open-ring magnet, or magnet float

* UL Recognition requires an approved power supply with energy limitation (UL 61010-1), or Class 2 rating according to the National Electrical Code (USA) / Canadian Electrical Code.

** The IP rating is not part of the UL Recognition.

Enhanced monitoring and diagnostics

SENSOR STATUS AND DIAGNOSTIC DISPLAY

Integrated diagnostic LEDs (green/red), located beside sensor connectors *(see 'Figure 1')*, provide basic visual monitoring for normal sensor operation and troubleshooting. Diagnostic display LEDs indicate four modes described in *'Table 1. Diagnostic display indicator modes'*

Figure 1. R-Series sensor Integrated diagnostic LEDs

Status LED (Green)	Off: On: Flashing:	Initializing Normal function Various flashing codes show different operational status
Error LED (Red)	Off: On: Flashing:	Normal function missing magnet Supply voltage beyond limits (high or low)
IN Port LED (Green)	Off: On: Flashing:	No link Link detected Traffic
OUT Port LED (Green)	Off: On: Flashing:	No link Link detected Traffic

Table 1. Diagnostic display indicator modes

EtherCAT interface

EtherCAT is an open field bus system which is based on Ethernet technology, (IEEE 802.3), with a high data rate and short response time, resulting in very good real-time performance. It is standardized in the IEC/PAS 62407 and is part of the ISO 15745-4 standard. The EtherCAT protocol is also being integrated into the IEC 61158, IEC 61784, and IEC 61800-7 standards.

The Temposonics EtherCAT sensor is connected as a slave device, and as such, fulfils all the requirements of the EtherCAT field bus system. Adding the sensor to an EtherCAT bus system is very easy. The system manager (e.g. TwinCAT from Beckoff Automation) gets all the parameters of the sensor from the XML file, available from the MTS website at http://www.mtssensors.com. There are no adjustments necessary on the sensor itself. For some applications, optimum system performance is obtained using the sensor's high speed updates, up to 10 kHz, by synchronizing to the EtherCAT's *'distributed clock mode'* (available on the "E101" sensor output option).

Operation modes and output

There are two operation modes available:

E101 - Fast update position and velocity:

- Designed for high-speed motion control
- Up to 5 simultaneous magnet measurements
- 100 µs update rate, (independent of stroke length)

E102 Multi-magnet position and velocity:

- Designed for gauging systems having many magnet positions
- Up to 20 simultaneous magnet measurements
- Standard update rates, (stroke length dependent)

When using multiple magnets, the minimum allowed distance between magnets is 75 mm (3 in.) to maintain proper sensor output *(see 'Figure 2')*.

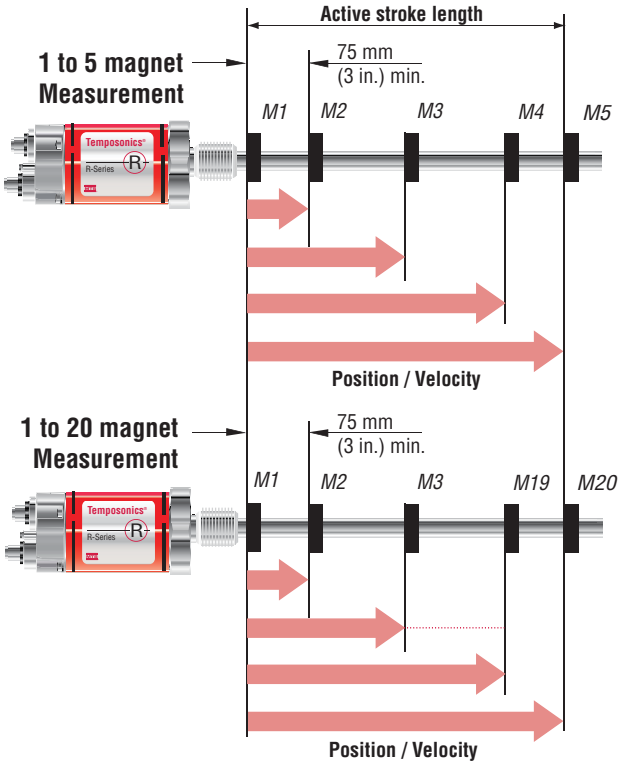

Figure 2. Single to multi-magnet output diagram

LINEARITY CORRECTION OPTION (LCO)

The Linearity Correction Option (LCO) provides improved sensor output accuracy. For most stroke lengths linearity accuracy is improved up to a factor of 5 resulting in deviations from actual position of less than ± 20 µm (0.0008 in.). For stroke lengths over 5000 mm (197 in.), the linearity accuracy is improved up to factor of 10. Selecting the sensor style and magnet is important (both must be matched together). Contact the factory for assistance when designing for the LCO in your application.

Model RP profile-style sensor dimension references

MODEL RP, PROFILE-STYLE SENSOR WITH CAPTIVE-SLIDING MAGNET *Drawing is for reference only, contact applications engineering for tolerance specific information.*

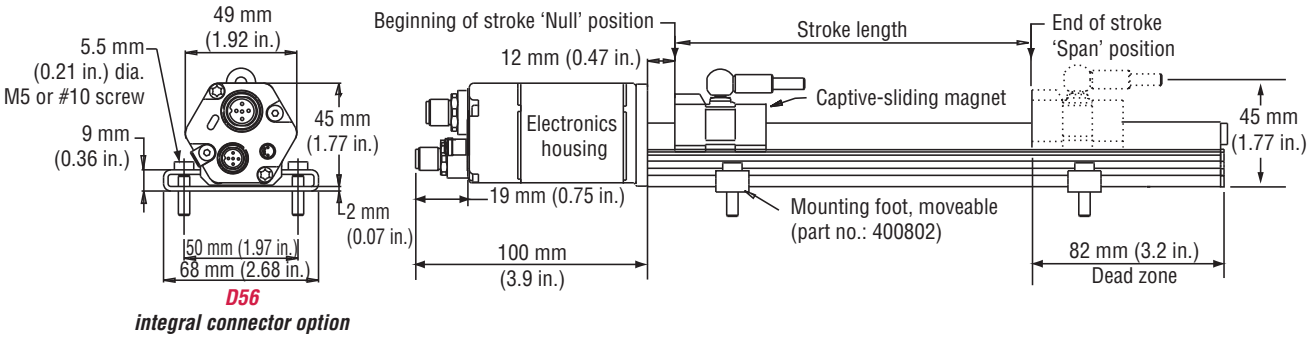

Figure 3. R-Series Model RP Profile-style sensor dimension reference (Shown with the ***D56*** connector option)

MODEL RP, PROFILE-STYLE SENSOR WITH OPEN-RING MAGNET *Drawing is for reference only, contact applications engineering for tolerance specific information.*

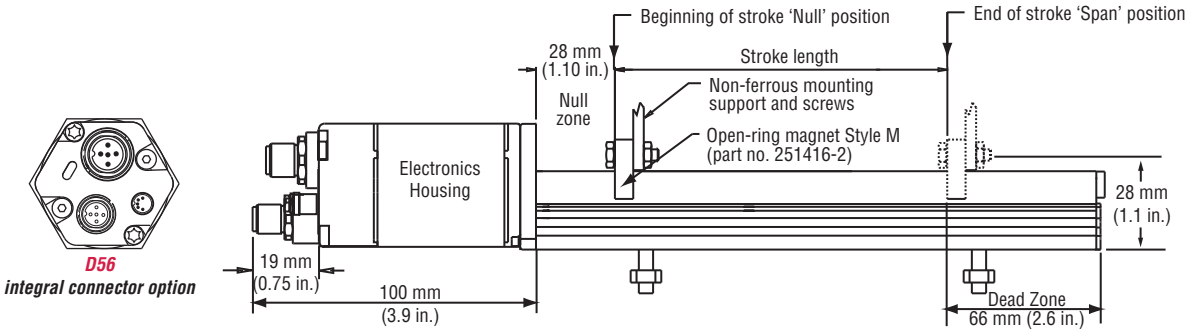

Figure 4. R-Series Model RP Profile-style sensor dimension reference (Shown with the ***D56*** connector option)

Standard magnet selections, mounting and installation (Model RP)

SELECTION OF POSITION MAGNETS (ONE MAGNET INCLUDED WITH MODEL RP SENSOR)

Temposonics Model RP profile-style sensors offer two basic mounting methods; side grooves for use with mounting feet or a bottom groove that accepts special T-Slot nuts. Both the mounting feet and T-Slot nuts can be positioned along the sensor extrusion to best secure the sensor for each particular application.

Refer to the Accessories section of this catalog for magnet selections and detailed mounting and installation information.

Model RH rod-style sensor dimension reference

The Temposonics R-Series rod-style sensor (Model RH) offers modular construction, flexible mounting configurations, and easy installation. The Model RH sensor is designed for mounting in applications where high pressure conditions exist (5000 psi continuous, 10,000 psi spike) such as inside hydraulic cylinders. The Model RH sensor may also be mounted externally in many applications.

Stroke-dependent Dead Zones:	
Stroke length:	**Dead zone:**
25 mm (1 in.) - 5000 mm (197 in.)	63.5 mm (2.5 in.)
5005 mm (197 in.) - 7620 mm (300 in.)	66 mm (2.6 in.)

MODEL RH, ROD-STYLE SENSOR WITH RING MAGNET (MAGNET ORDERED SEPARATELY) *Drawing is for reference only, contact applications engineering for tolerance specific information.*

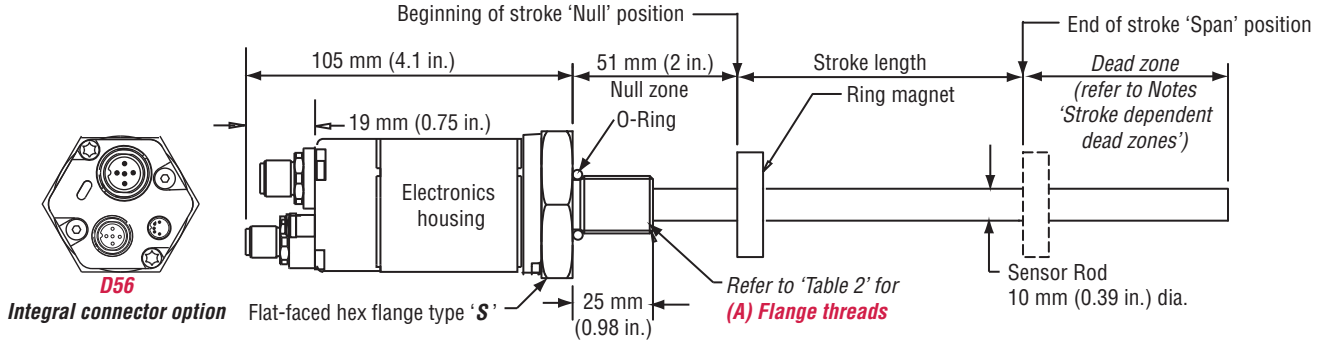

Figure 5. Model RH Rod-style sensor dimension reference (shown with ***D56*** integral connector options)

MODEL RH, ROD-STYLE SENSOR WITH RING MAGNET (MAGNET ORDERED SEPARATELY)
Drawing is for reference only, contact applications engineering for tolerance specific information.

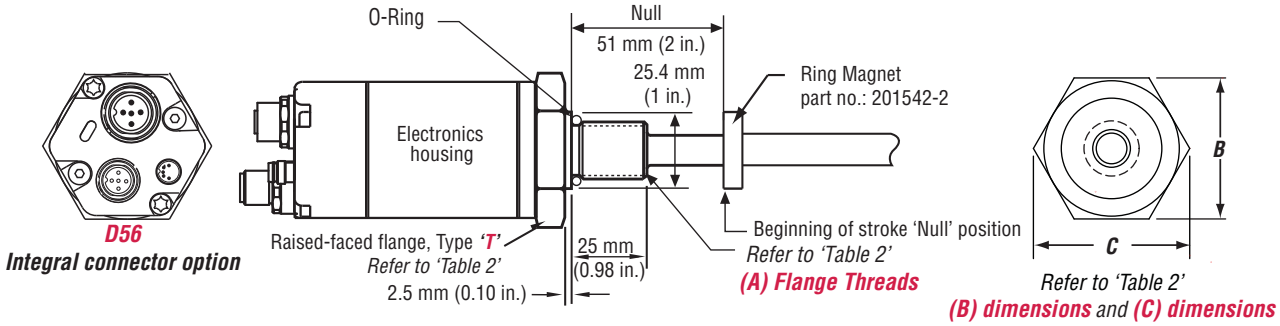

Figure 6. Model RH Rod-style sensor dimension reference (Shown with the ***D56*** Integral cable connection type option)

Housing style Flange type	Description	(A) Flange threads	(B) Dimensions	(C) Dimensions
T	US customary threads with raised-face flange	3/4" - 16 UNF-3A	1.75 in.	2 in.
S	US customary threads with flat-faced flange	3/4" - 16 UNF-3A	1.75 in.	2 in.
M	Metric threads with flat-faced flange	M18 x 1.5	46 mm	53 mm

Table 2. Model RH Rod-style sensor housing style and flange type references

Standard magnets, mounting and installation (Model RH)

Magnets must be ordered separately with Model RH position sensors. The standard ring magnet (part number 201542-2) is suitable for most applications.

Refer to the Accessories section of this catalog for magnet selections and detailed mounting and installation information.

Connections and wiring

(D56) BUS CONNECTOR OPTION

D56 connector option for 'daisy chain' topologies. A separate cable is used for the supply voltage. Unused connectors should be covered by a protective cap (part no.: 370537).

D56
Female
4-pin Bus In

D56
Female
4-pin Bus Out

D56
Male, 4-pin
Input voltage

BUS CONNECTIONS IN/OUT

Female, 4-pin (M12-D) Integral connector pin-out as viewed from the end of the sensor

Pin number	Cable color	Function
1	Yellow	Tx+
2	White	Rx+
3	Orange	Tx-
4	Blue	Rx-

INPUT VOLTAGE

Input voltage, male, 4-pin (M8) integral connector pin-out as viewed from the end of the sensor

Pin number	Cable color	Supply voltage
1	Brown	+24 Vdc (-15/+20%)
2	White	No connection
3	Blue	DC ground (for supply)
4	Black	No connection

R								D	5	6	1	E	1	0				
1	2	3	4	5	6	7	8	9	10	11	12	13	14	15	16	17	18	19

SENSOR MODEL = R 1-2

RP = Profile style **RH** = Hydraulic rod style

HOUSING STYLE = 3

Model RP profile-style sensor (includes one magnet):

S = Captive-sliding magnet with ball joint at top (part no. 252182)

V = Captive-sliding magnet with ball joint at front (part no. 252184)

M = Open-ring magnet (part no. 251416-2)

Model RH rod-style sensor (magnet(s) must be ordered separately):

T = US customary threads, raised-faced flange and pressure tube, standard

S = US customary threads, flat-faced flange and pressure tube, standard

M = Metric threads, flat-faced flange and pressure tube, standard

U = Same as option "T", except uses fluoroelastomer seals for the electronics housing

H = Same as option "S", except uses fluoroelastomer seals for the electronics housing

V = Same as option "M", except uses fluoroelastomer seals for the electronics housing

B = Sensor cartridge only (no flange or pressure tube, stroke length < 1830 mm (72 in.))

STROKE LENGTH = 4-8

_ _ _ _ **M** = Millimeters
(Encode in 5 mm increments)

_ _ _ . _ **U** = Inches and tenths
(Encode in 0.1 in. increments)

Stroke Length Notes:

1. Profile-style sensor (model RP) stroke range = 25 mm (1 in.) - 5080 mm. (200 in.)
2. Rod-style sensor (model RH) stroke range = 25 mm (1 in.) - 7620 mm (300 in.)

CONNECTION TYPE = D 5 6 9-11

Integral connector:

D56 = Two 4-pin female (M12-D), plus one 4-pin male (M8)

INPUT VOLTAGE = 1 12

1 = +24 Vdc (+20% - 15%)

OUTPUT = E 1 0 13-16

E101 = EtherCAT, position and velocity, high speed updates, maximum 5 magnets

E102 = EtherCAT, position and velocity, maximum 20 magnets

E103 = Same as option '**E101**' with Linearity Correction Option (LCO)

E104 = Same as option '**E102**' with Linearity Correction Option (LCO)

NUMBER OF MAGNETS = Z 17-19

For multi-position measurement only (Order additional magnets separately).

Z _ _ = Number of magnets for output **E101** (range 02 to 05), or for output **E102** (range 02 to 20)

Temposonics®

Magnetostrictive, Absolute, Non-contact
Linear-Position Sensors

R-Series Models RP and RH

EtherNet/IP™ Industrial Ethernet Interface

Data Sheet

MTS SENSORS

Document Part Number
551253 Revision C

R-Series
EtherNet/IP

Model RP Profile-style position sensor

Model RH Rod-style position sensor

EtherNet/IP™ conformance tested

FEATURES

- Linear, Absolute Measurement
- LEDs For Sensor Diagnostics
- Superior Accuracy, Resolution down to 1 µm
- Non-Contact Sensing Technology
- Linearity Deviation Less Than 0.01%
- Repeatability Within 0.001%
- Direct EtherNet/IP Interface, Position + Velocity

BENEFITS

- Rugged Industrial Sensor
- Position + Velocity Measurements For Up to 20 Magnets

APPLICATIONS

- Continuous Operation In Harsh Industrial Conditions
- High Pressure Conditions
- For Accurate, Simultaneous Multi-Position and Velocity Measurements

TYPICAL INDUSTRIES

- Factory Automation
- Fluid Power
- Plastic Injection and Blow Molding
- Material Handling and Packaging

Rockwell Automation
Encompass™ Product Partner
Americas

c UL us

ISO 9001 CERTIFIED

CE

EtherNet/IP™ is a trademark used under license by ODVA.
EtherNet/IP CONFORMANCE TESTED™ is a certification mark of ODVA.

Product overview

Temposonics R-Series EtherNet/IP™ sensors represent MTS Sensors' development and product offering in networked position feedback. EtherNet/IP™ systems require only a single point of connection for both configuration and control, because EtherNet/IP supports both I/O (or implicit) messages—those that typically contain time-critical control data—and explicit messages—those in which the data field carries both protocol information and instructions for service performance. And, as a producer-consumer network that supports multiple communication hierarchies and message prioritization, EtherNet/IP™ provides more efficient use of bandwidth than a device network based on a source-destination model. EtherNet/IP systems can be configured to operate either in a master/slave or distributed control architecture using peer-to-peer communication.

Product specifications

Parameters	Specifications
OUTPUT	
Measured output variables:	Simultaneous multi-position and velocity measurements up to 20 magnets.
Resolution:	1 to 1000 µm selectable
Update time:	1.0 ms up to 2000 mm 2.0 ms up to 4800 mm, 4.0 ms up to 7600 mm stroke length
Linearity deviation:	< ± 0.01% full stroke (minimum ± 50 µm)
Repeatability:	< ± 0.001% full stroke (minimum ± 2.5 µm)
Hysteresis:	< 4 µm
Outputs:	**Interface:** EtherNet/IP™ **Data transmission rate:** 100 Mbit/s max.
Stroke length:	**Range (Profile style):** 25 mm to 5080 mm (1 in. to 200 in.) **Range (Rod style):** 25 mm to 7620 mm (1 in. to 300 in.)
ELECTRONICS	
Operating voltage:	**+24 Vdc nominal:** -15% or +20%* **Polarity protection:** up to -30 Vdc **Over voltage protection:** up to 36 Vdc **Current drain:** 110 mA typical **Dielectric withstand voltage:** 500 Vdc (DC ground to machine ground)

Parameters	Specifications
ENVIRONMENTAL	
Operating conditions:	**Operating temperature:** -40 °C (-40 °F) to +75 °C (+167 °F) **Relative humidity:** 90% no condensation **Temperature coefficient:** < 15 ppm/ °C
EMC test:	**Electromagnetic emission:** EN 61000-6-4 **Electromagnetic susceptibility:** EN 61000-6-2, EN 61000-4-2/3/4/6 CE qualified
Shock rating:	100 g (single hit)/IEC standard 68-2-27 (survivability)
Vibration rating:	15 g / 10 to 2000 Hz / IEC standard 68-2-6
WIRING	
Connection type:	D56 option: Two female 4-pin (M12-D) plus one 4-pin male (M8) connector
PROFILE STYLE SENSOR (MODEL RP)	
Electronic head:	Aluminum housing with diagnostic LED display (LEDs located beside connectors)
Sealing:	IP 65**
Sensor extrusion:	Aluminum (Temposonics profile style)
Mounting:	Any orientation. Adjustable mounting feet or T-slot nut (M5 threads) in bottom groove
Magnet types:	Captive-sliding magnet or open-ring magnet
ROD STYLE SENSOR (MODEL RH)	
Electronic head:	Aluminum housing with diagnostic LED display (LEDs located beside connectors)
Sealing:	IP 67**
Sensor rod:	304L stainless steel
Operating pressure:	350 bar static, 690 bar peak (5000 psi static, 10,000 psi peak)
Mounting:	Any orientation. Threaded flange M18 x 1.5 or 3/4 - 16 UNF-3A
Typical mounting torque:	45 N-m (33 ft. - lbs.)
Magnet types:	Ring magnet, open-ring magnet, or magnet float

* UL Recognition requires an approved power supply with energy limitation (UL 61010-1), or Class 2 rating according to the National Electrical Code (USA) / Canadian Electrical Code.

** The IP rating is not part of the UL Recognition.

Enhanced monitoring and diagnostics

SENSOR STATUS AND DIAGNOSTIC DISPLAY

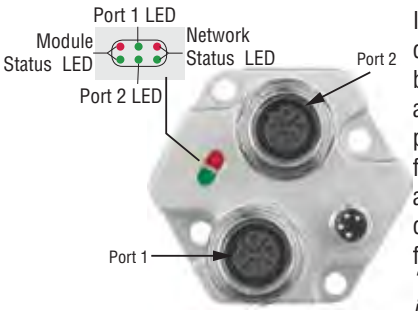

Integrated green and red diagnostic LEDs are located beside the sensor's connectors as shown in *'Figure 1'*, the LEDs provide basic visual monitoring for normal sensor operation and troubleshooting. These diagnostic display LEDs indicate four modes as described in *'Table 1. Diagnostic display indicator modes'*

Figure 1. R-Series sensor Integrated diagnostic LEDs

ETHER-NET	PORT 1 (INLET)	
Green **Green** **Red**	On: Flickering: On:	Ethernet connection established Data activity Magnet not detected or wrong quantity of magnets
ETHER-NET	**PORT 2 (OUTLET)**	
Green **Green**	On: Flickering:	Ethernet connection established Data activity
NETWORK STATUS		
Green **Green** **Red** **Red**	On: Flashing: On: Flashing:	At least one connection established No connection established Unrecoverable fault detected Recoverable fault detected
MODULE STATUS		
Green **Green** **Red**	On: Flashing: Flashing:	IP address configured IP address not configured Duplicate IP address detected

Table 1. Diagnostic display indicator modes

EtherNet/IP™ interface

EtherNet/IP™ is an Industrial Ethernet implementation of the Common Industrial Protocol (CIP), managed by the Open DeviceNet Vendors Association (ODVA), which defines communication services for automation. Ethernet/IP uses standard IEEE 802.3 technology at both the Physical Layer and Data Layers for compatibility with other applications and protocols. The protocol is also compliant with IEC 61158-2 for the physical layer and IEC 61784-1, -2 for measurement and control profiles.

Note:

Go to www.mtssensors.com to download latest EDS file.

This Ethernet/IP device also offers Device-Level-Ring (DLR) capability to directly connect devices to a ring topology without the use of external switches. DLR provides device-level network re-routing and failure point identification to improve reliability and network recovery time.

Operation modes and output

N101 Single and Multi-magnet position and velocity:

Up to 20 simultaneous magnet measurements are possible when using multiple magnets. The minimum allowed distance between magnets is 75 mm (3 in.) to maintain proper sensor output *(see 'Figure 2')*.

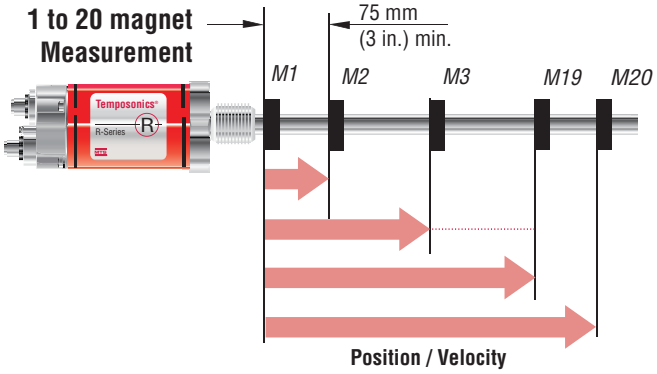

Figure 2. Single to multi-magnet output diagram

R-Series EtherNet/IP

Model RP profile-style sensor dimension references

MODEL RP, PROFILE-STYLE SENSOR WITH CAPTIVE-SLIDING MAGNET

Drawing is for reference only, contact applications engineering for tolerance specific information.

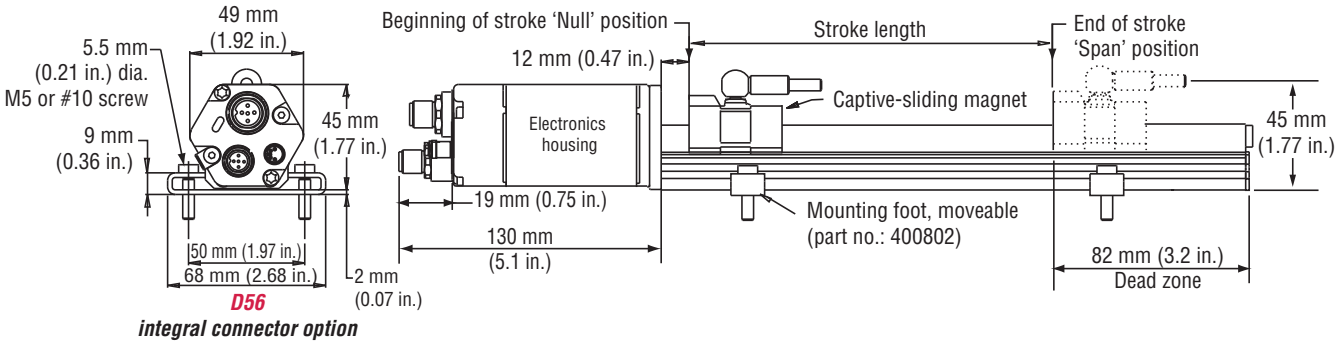

Figure 3. R-Series Model RP Profile-style sensor dimension reference (Shown with the ***D56*** connector option)

MODEL RP, PROFILE-STYLE SENSOR WITH OPEN-RING MAGNET

Drawing is for reference only, contact applications engineering for tolerance specific information.

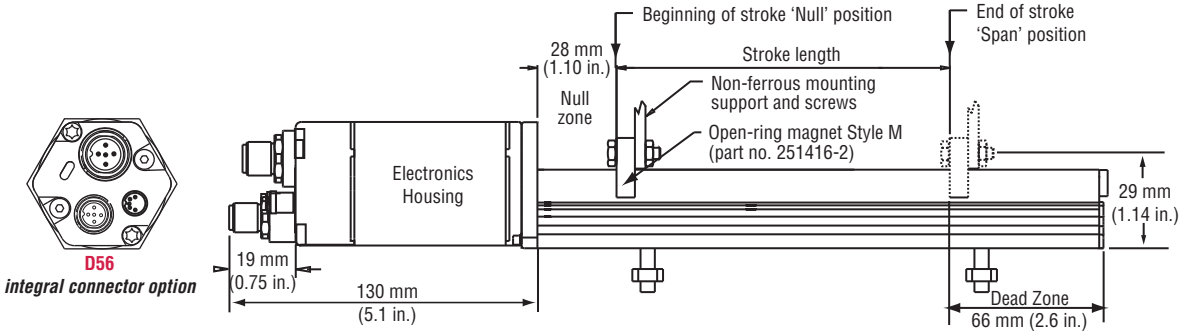

Figure 4. R-Series Model RP Profile-style sensor dimension reference (Shown with the ***D56*** connector option)

Standard magnet selections, mounting and installation (Model RP)

SELECTION OF POSITION MAGNETS (ONE MAGNET INCLUDED WITH MODEL RP SENSOR)

Temposonics Model RP profile-style sensors offer two basic mounting methods; side grooves for use with mounting feet or a bottom groove that accepts special T-Slot nuts. Both the mounting feet and T-Slot nuts can be positioned along the sensor extrusion to best secure the sensor for each particular application.

Refer to the Accessories section of this catalog for magnet selections and detailed mounting and installation information.

Model RH rod-style sensor dimension reference

The Temposonics R-Series rod-style sensor (Model RH) offers modular construction, flexible mounting configurations, and easy installation. The Model RH sensor is designed for mounting in applications where high pressure conditions exist (5000 psi continuous, 10,000 psi spike) such as inside hydraulic cylinders. The Model RH sensor may also be mounted externally in many applications.

Stroke-dependent Dead Zones:	
Stroke length:	**Dead zone:**
25 mm (1 in.) - 5000 mm (197 in.)	63.5 mm (2.5 in.)
5005 mm (197 in.) - 7620 mm (300 in.)	66 mm (2.6 in.)

MODEL RH, ROD-STYLE SENSOR WITH RING MAGNET (MAGNET ORDERED SEPARATELY)
Drawing is for reference only, contact applications engineering for tolerance specific information.

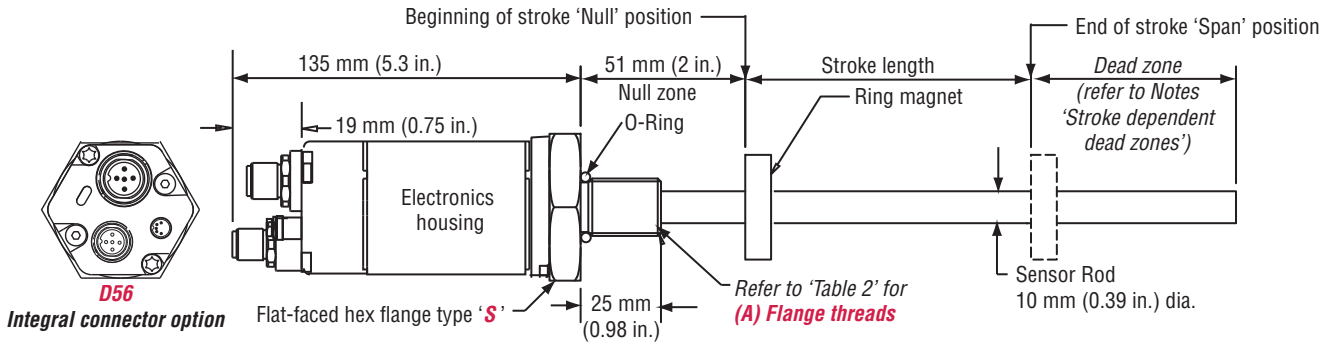

Figure 5. Model RH Rod-style sensor dimension reference (shown with ***D56*** integral connector options)

MODEL RH, ROD-STYLE SENSOR WITH RING MAGNET (MAGNET ORDERED SEPARATELY)
Drawing is for reference only, contact applications engineering for tolerance specific information.

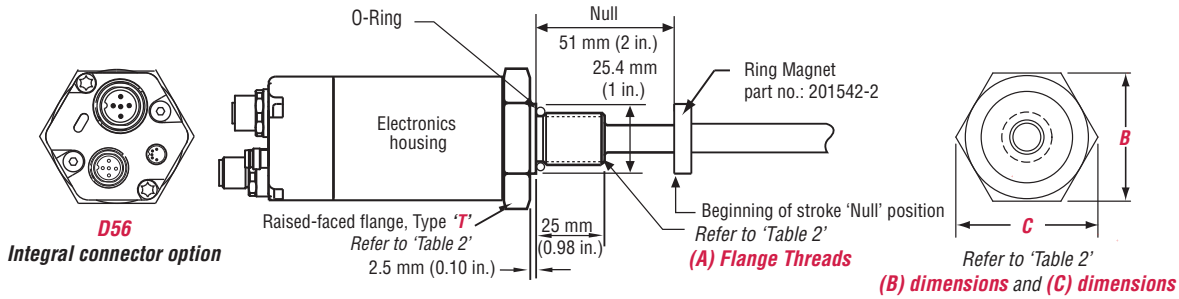

Figure 6. Model RH Rod-style sensor dimension reference (Shown with the ***D56*** Integral cable connection type option)

Housing style Flange type	Description	(A) Flange threads	(B) Dimensions	(C) Dimensions
T	US customary threads with raised-face flange	3/4" - 16 UNF-3A	1.75 in.	2 in.
S	US customary threads with flat-faced flange	3/4" - 16 UNF-3A	1.75 in.	2 in.
M	Metric threads with flat-faced flange	M18 x 1.5	46 mm	53 mm

Table 2. Model RH Rod-style sensor housing style and flange type references

Standard magnets, mounting and installation (Model RH)

Magnets must be ordered separately with Model RH position sensors. The standard ring magnet (part number 201542-2) is suitable for most applications.

Refer to the Accessories section of this catalog for magnet selections and detailed mounting and installation information.

Connections and wiring

(D56) BUS CONNECTOR OPTION

D56 connector option for 'daisy chain' topologies. A separate cable is used for the supply voltage. Unused connectors should be covered by a protective cap (part no.: 370537).

D56
Female
4-pin Bus
Port 1

D56
Female
4-pin Bus
Port 2

D56
Male, 4-pin
Input voltage

BUS CONNECTIONS PORTS 1 AND 2

Female, 4-pin (M12-D) Integral connector pin-out as viewed from the end of the sensor

Pin number	Cable color	Function
1	Yellow	Tx+
2	White	Rx+
3	Orange	Tx-
4	Blue	Rx-

INPUT VOLTAGE

Input voltage, male, 4-pin (M8) integral connector pin-out as viewed from the end of the sensor

Pin number	Cable color	Supply voltage
1	Brown	+24 Vdc (-15/+20%)
2	White	No connection
3	Blue	DC ground (for supply)
4	Black	No connection

R								D	5	6	1	N	1	0	1			
1	2	3	4	5	6	7	8	9	10	11	12	13	14	15	16	17	18	19

SENSOR MODEL = R 1-2

RP = Profile style **RH** = Hydraulic rod style

HOUSING STYLE = 3

Model RP profile-style sensor (includes one magnet):

S = Captive-sliding magnet with ball joint at top (part no. 252182)

V = Captive-sliding magnet with ball joint at front (part no. 252184)

M = Open-ring magnet (part no. 251416-2)

Model RH rod-style sensor (magnet(s) must be ordered separately):

T = US customary threads, raised-faced flange and pressure tube, standard

U = Same as option "T", except uses fluoroelastomer seals for the electronics housing

B = Sensor cartridge only (no flange or pressure tube, stroke length < 1830 mm (72 in.))

S = US customary threads, flat-faced flange and pressure tube, standard

H = Same as option "S", except uses fluoroelastomer seals for the electronics housing

M = Metric threads, flat-faced flange and pressure tube, standard

V = Same as option "M", except uses fluoroelastomer seals for the electronics housing

STROKE LENGTH = 4-8

— — — — **M** = Millimeters
(Encode in 5 mm increments)

— — — . — **U** = Inches and tenths
(Encode in 0.1 in. increments)

Stroke Length Notes:

1. Profile-style sensor (model RP) stroke range = 25 mm (1 in.) - 5080 mm. (200 in.)
2. Rod-style sensor (model RH) stroke range = 25 mm (1 in.) - 7620 mm (300 in.)

CONNECTION TYPE = D 5 6 9-11

Integral connector:

D56 = Two 4-pin female (M12-D), plus one 4-pin male (M8)

INPUT VOLTAGE = 1 12

1 = +24 Vdc (+20% - 15%)

OUTPUT = N 1 0 1 13-16

N101 = EtherNet/IP, position and velocity, maximum 20 magnets

NUMBER OF MAGNETS = Z 17-19

For multi-position measurement only (Order additional magnets separately).

Z — — = Number of magnets for output **N101** (range 02 to 20)

Temposonics®

Magnetostrictive, Absolute, Non-contact
Linear-Position Sensors

R-Series Models RP and RH

Profinet Interface

Data Sheet

Document Part Number
551451 Revision B

Model RP Profile-style position sensor

Model RH Rod-style position sensor

R-Series Profinet

FEATURES

- Linear, Absolute Measurement
- LEDs For Sensor Diagnostics
- Superior Accuracy, Resolution down to 1 µm
- Non-Contact Sensing Technology
- Linearity Deviation Less Than 0.01%
- Repeatability Within 0.001%
- Intergrated Profinet IRT switch

BENEFITS

- Rugged Industrial Sensor
- Position + Velocity Measurements For Up to 19 Magnets

APPLICATIONS

- Continuous Operation In Harsh Industrial Conditions
- High Pressure Conditions
- For Accurate, Simultaneous Multi-Position and Velocity Measurements

TYPICAL INDUSTRIES

- Factory Automation
- Fluid Power
- Plastic Injection and Blow Molding
- Material Handling and Packaging

Product overview

The sensor meets the requirements of the Profinet IO industrial Ethernet standards and can be directly operating in a network with decentralized peripherals. Profinet is characterized by a high data transfer and high real-time capability. It´s officially certified by the PNO (Profinet user organization).

Product specifications

Parameters	Specifications
OUTPUT	
Measured output variables:	Simultaneous multi-position or velocity measurements up to 19 magnets.
Resolution:	1 to 100 µm selectable
Update time:	Dependent on stroke length
Motion control cycle time:	Minimum 1 ms
Linearity deviation:	< ± 0.01% full stroke (minimum ± 50 µm)
Repeatability:	< ± 0.001% full stroke (minimum ± 2.5 µm)
Hysteresis:	< 4 µm
Outputs:	**Interface:** Profinet IO RT **Data transmission rate:** 100 Mbit/s max.
Stroke length:	**Range (Profile style):** 25 mm to 5080 mm (1 in. to 200 in.) **Range (Rod style):** 25 mm to 7620 mm (1 in. to 300 in.)
ELECTRONICS	
Operating voltage:	**+24 Vdc nominal:** -15% or +20%* **Polarity protection:** up to -30 Vdc **Over voltage protection:** up to 36 Vdc **Current drain:** 110 mA typical **Dielectric withstand voltage:** 500 Vdc (DC ground to machine ground)

Parameters	Specifications
ENVIRONMENTAL	
Operating conditions:	**Operating temperature:** -40 °C (-40 °F) to +75 °C (+167 °F) **Relative humidity:** 90% no condensation **Temperature coefficient:** < 15 ppm/ °C
EMC test:	**Electromagnetic emission:** EN 61000-6-4 (for industrial environments) **Electromagnetic immunity:** EN 61000-6-2 (The sensor meets the requirements of the EC directives and is marked with CE)
Shock rating:	100 g (single hit)/IEC standard 60068-2-27 (survivability)
Vibration rating:	15 g / 10 to 2000 Hz / IEC standard 60068-2-6 (resonance frequencies excluded)
WIRING	
Connection type:	D58 option: Two female 4-pin (M12-D) plus one 4-pin male (M12-A) connector
PROFILE STYLE SENSOR (MODEL RP)	
Electronic head:	Aluminum housing with diagnostic LED display (LEDs located beside connectors)
Sealing:	IP 65**
Sensor extrusion:	Aluminum (Temposonics profile style)
Mounting:	Any orientation. Adjustable mounting feet or T-slot nut (M5 threads) in bottom groove
Magnet types:	Captive-sliding magnet or open-ring magnet
ROD STYLE SENSOR (MODEL RH)	
Electronic head:	Aluminum housing with diagnostic LED display (LEDs located beside connectors)
Sealing:	IP 67**
Sensor rod:	304L stainless steel
Operating pressure:	350 bar static, 690 bar peak (5000 psi static, 10,000 psi peak)
Mounting:	Any orientation. Threaded flange M18 x 1.5 or 3/4 - 16 UNF-3A
Typical mounting torque:	45 N-m (33 ft. - lbs.)
Magnet types:	Ring magnet, open-ring magnet, or magnet float

* UL Recognition requires an approved power supply with energy limitation (UL 61010-1), or Class 2 rating according to the National Electrical Code (USA) / Canadian Electrical Code.

** The IP rating is not part of the UL Recognition.

Enhanced monitoring and diagnostics

SENSOR STATUS AND DIAGNOSTIC DISPLAY

Integrated LED (green/red) provides basic visual feedback for normal sensor operation and troubleshooting.

Figure 1. R-Series sensor Integrated diagnostic LEDs

Green	Red	Description
ON	OFF	Normal function
ON	ON	No master contact
ON	Flashing	Parametrization failed

Table 1. Diagnostic display indicator modes

Profinet interface

Profinet versions

The sensor can be ordered in following versions:

a) Encoder Profile 4.1: PNO standardized profile

b) MTS Communication Profile: It allows a simultaneous position measurement up to 19 positions. The configuration is similar to the sequence of Temposonics® Profibus sensors

Operation modes and output

Single and Multi-magnet position and velocity:

Up to 19 simultaneous magnet measurements are possible when using multiple magnets. The minimum allowed distance between magnets is 75 mm (3 in.) to maintain proper sensor output *(see 'Figure 2')*.

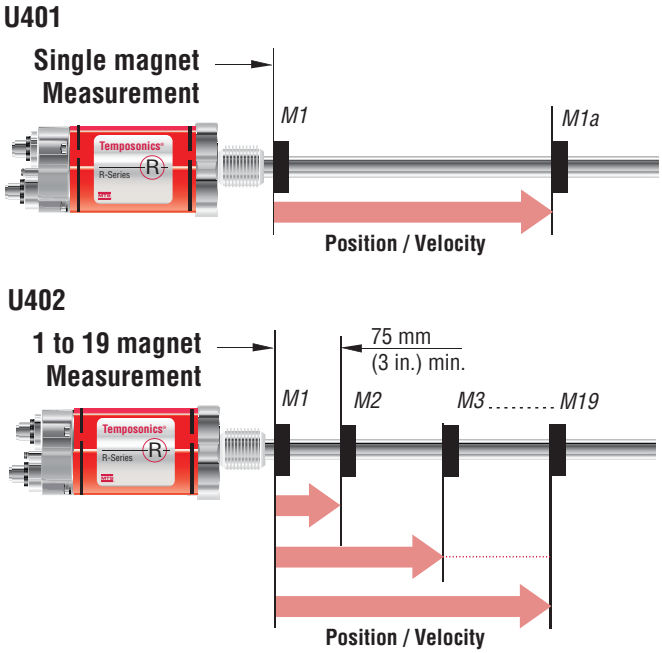

Figure 3. Single and multi-magnet output diagram

R-Series Profinet

Model RP profile-style sensor dimension references

MODEL RP, PROFILE-STYLE SENSOR WITH CAPTIVE-SLIDING MAGNET

Drawing is for reference only, contact applications engineering for tolerance specific information.

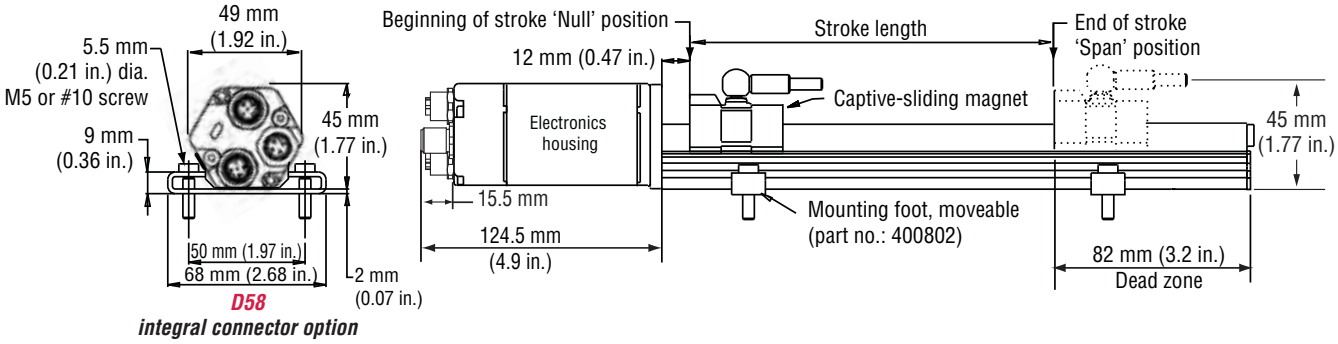

Figure 4. R-Series Model RP Profile-style sensor dimension reference (Shown with the ***D58*** connector option)

MODEL RP, PROFILE-STYLE SENSOR WITH OPEN-RING MAGNET

Drawing is for reference only, contact applications engineering for tolerance specific information.

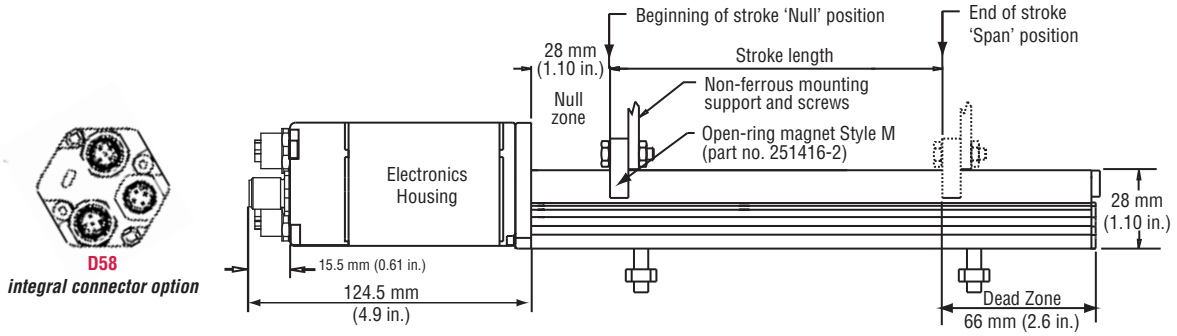

Figure 5. R-Series Model RP Profile-style sensor dimension reference (Shown with the ***D58*** connector option)

Standard magnet selections, mounting and installation (Model RP)

SELECTION OF POSITION MAGNETS (ONE MAGNET INCLUDED WITH MODEL RP SENSOR)

Temposonics Model RP profile-style sensors offer two basic mounting methods; side grooves for use with mounting feet or a bottom groove that accepts special T-Slot nuts. Both the mounting feet and T-Slot nuts can be positioned along the sensor extrusion to best secure the sensor for each particular application.

Refer to the Accessories section of this catalog for magnet selections and detailed mounting and installation information.

Model RH rod-style sensor dimension reference

The Temposonics R-Series rod-style sensor (Model RH) offers modular construction, flexible mounting configurations, and easy installation. The Model RH sensor is designed for mounting in applications where high pressure conditions exist (5000 psi continuous, 10,000 psi spike) such as inside hydraulic cylinders. The Model RH sensor *(see 'Figure 5')* may also be mounted externally in many applications.

Stroke-dependent Dead Zones:	
Stroke length:	**Dead zone:**
25 mm (1 in.) - 5000 mm (197 in.)	63.5 mm (2.5 in.)
5005 mm (197 in.) - 7620 mm (300 in.)	66 mm (2.6 in.)

MODEL RH, ROD-STYLE SENSOR WITH RING MAGNET (MAGNET ORDERED SEPARATELY)
Drawing is for reference only, contact applications engineering for tolerance specific information.

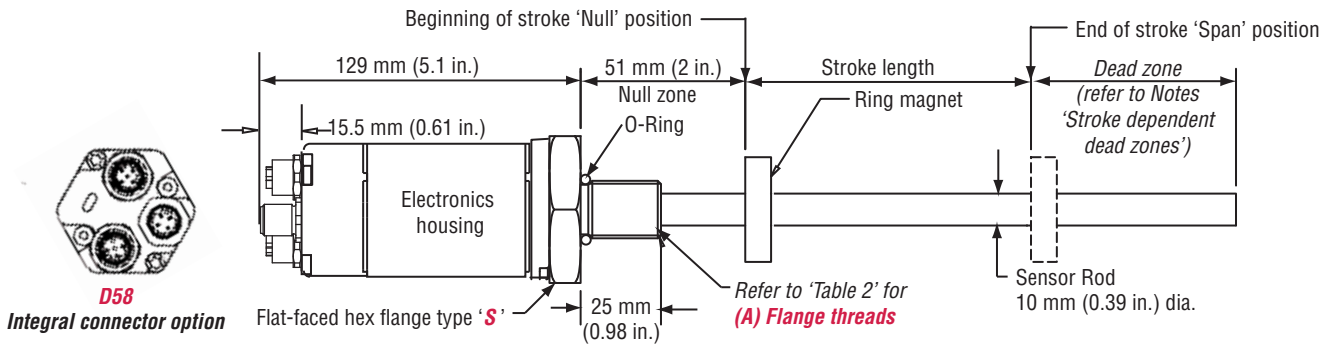

Figure 6. Model RH Rod-style sensor dimension reference (shown with ***D58*** integral connector options)

MODEL RH, ROD-STYLE SENSOR WITH RING MAGNET (MAGNET ORDERED SEPARATELY)
Drawing is for reference only, contact applications engineering for tolerance specific information.

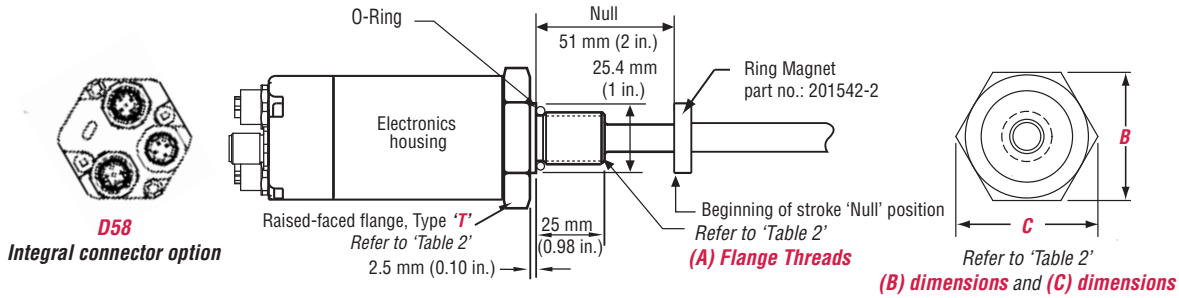

Figure 7. Model RH Rod-style sensor dimension reference (Shown with the ***D58*** Integral cable connection type option)

Housing style Flange type	Description	(A) Flange threads	(B) Dimensions	(C) Dimensions
T	US customary threads with raised-face flange	3/4" - 16 UNF-3A	1.75 in.	2 in.
S	US customary threads with flat-faced flange	3/4" - 16 UNF-3A	1.75 in.	2 in.
M	Metric threads with flat-faced flange	M18 x 1.5	46 mm	53 mm

Model RH Rod-style sensor housing style and flange type references

Standard magnets, mounting and installation (Model RH)

Magnets must be ordered separately with Model RH position sensors. The standard ring magnet (part number 201542-2) is suitable for most applications.

Refer to the Accessories section of this catalog for magnet selections and detailed mounting and installation information.

R-Series Profinet

Connections and wiring

(D58) BUS CONNECTOR OPTION

D58 connector option for 'daisy chain' topologies. A separate cable is used for the supply voltage. Unused connectors should be covered by a protective cap (part no.: 370537).

BUS CONNECTIONS PORTS 1 AND 2

Female, 4-pin (M12-D) Integral connector pin-out as viewed from the end of the sensor

Pin number	Cable color	Function
1	Yellow	Tx+
2	White	Rx+
3	Orange	Tx-
4	Blue	Rx-

INPUT VOLTAGE

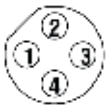

Input voltage, male, 4-pin (M12-A) integral connector pin-out as viewed from the end of the sensor

Pin number	Cable color	Supply voltage
1	Brown	+24 Vdc (-15/+20%)
2	White	No connection
3	Blue	DC ground (for supply)
4	Black	No connection

R								D	5	8	1	U	4	0				
1	2	3	4	5	6	7	8	9	10	11	12	13	14	15	16	17	18	19

SENSOR MODEL = R 1-2

RP = Profile style **RH** = Hydraulic rod style

HOUSING STYLE = 3

Model RP profile-style sensor (includes one magnet):

S = Captive-sliding magnet with ball joint at top (part no. 252182)

V = Captive-sliding magnet with ball joint at front (part no. 252184)

M = Open-ring magnet (part no. 251416-2)

Model RH rod-style sensor (magnet(s) must be ordered separately):

T = US customary threads, raised-faced flange and pressure tube, standard

S = US customary threads, flat-faced flange and pressure tube, standard

M = Metric threads, flat-faced flange and pressure tube, standard

U = Same as option "T", except uses fluoroelastomer seals for the electronics housing

H = Same as option "S", except uses fluoroelastomer seals for the electronics housing

V = Same as option "M", except uses fluoroelastomer seals for the electronics housing

B = Sensor cartridge only (no flange or pressure tube, stroke length < 1830 mm (72 in.))

STROKE LENGTH = 4-8

_ _ _ _ **M** = Millimeters
(Encode in 5 mm increments)

_ _ _ . _ **U** = Inches and tenths
(Encode in 0.1 in. increments)

Stroke Length Notes:

1. Profile-style sensor (model RP) stroke range = 25 mm (1 in.) - 5080 mm. (200 in.)
2. Rod-style sensor (model RH) stroke range = 25 mm (1 in.) - 7620 mm (300 in.)

CONNECTION TYPE = D 5 8 9-11

Integral connector:

D58 = Two 4-pin female (M12-D), plus one 4-pin male (M12-A)

INPUT VOLTAGE = 1 12

1 = +24 Vdc (+20% - 15%)

OUTPUT = U 4 0 13-16

U401 = Profinet RT, Encoder profile, 1 magnet

U402 = Profinet RT, MTS profile, 1 to 19 magnets

NUMBER OF MAGNETS = Z 17-19

For multi-position measurement only (Order additional magnets separately).

Z _ _ = Number of magnets for output **U402** (range 02 to 19)

R-Series Profinet

Temposonics®

Magnetostrictive, Absolute, Non-contact
Linear-Position Sensors

R-Series Model RD4

Direct Position and Velocity Output

Data Sheet

MTS SENSORS

Document Part Number
551166 Revision B

Model RD4 compact sensor with detatched electronics

R-Series RD4

FEATURES

- R-Series Detached Electronics Sensor
- Linear, Absolute Measurement
- Non-Contact Sensing Technology
- Linearity Deviation Less Than 0.02%
- Repeatability Within 0.001%
- Full Range of Outputs: Voltage, Current, SSI, CANbus, DeviceNet, Profibus, EtherCAT® and EtherNet/IP
- Simultaneous Multi-Position and Velocity Measurements
- LEDs For Sensor Status and Diagnostics

BENEFITS

- Detached Sensor Electronics Provide for the Smallest R-Series sensor Head
- Allows Isolating the Sensor Electronics From High Temperatures, High Vibration / Shock, or Other Environmental Extremes

APPLICATIONS

- Clevis Mount Cylinders Having Minimal Space Available
- High Temperatures or High Vibration / Shock Levels that Require Remote Mounting of the Sensor Electronics
- Space Limited Applications

TYPICAL INDUSTRIES

- Fluid Power
- Steel Mills
- Material Handling and Packaging
- Woodworking, Metalworking and Assembly Tools

EtherCAT Technology Group
EtherNet/IP conformance tested
ISO 9001 CERTIFIED
CE

EtherNet/IP™ is a trademark used under license by ODVA.
EtherNet/IP CONFORMANCE TESTED™ is certification mark of ODVA.

Product overview

The Temposonics RD4 position sensor provides an added degree of flexibility compared to the standard R-Series rod style sensor package. The RD4 design utilizes a separate electronics housing and interconnection cable to allow installation of the sensor rod into small spaces. By relocating the electronics, the head of the sensor rod is reduced to its minimal size. This makes the RD4 ideal for use with clevis mount cylinders or any space limited cylinder application. Also, the RD4 sensor can be used for applications that require remote mounting of the sensor electronics due to environmental factors, such as, high temperatures or high levels of shock and vibration.

The RD4 interconnection cable exits the head of the sensor rod and connects to the electronics housing. The electronics housing, along with its mounting block, can be configured with either a side cable connection or a bottom cable connection. The side cable connection is for use with threaded rod styles; 'M', 'T', 'C' and 'D'. These threaded rod styles provide for easy sensor installation into a standard threaded port opening on the top of the cylinder end cap.

The bottom cable connection is for use with the pressure-fit rod style (i.e. style 'S'). The rod style 'S' requires an appropriately machined cavity in the cylinder end cap to house the head of the sensor rod. Also, a hole going through the end cap is needed to channel the interconnection cable to the electronics housing that mounts on the side of the end cap. Proper design and careful sensor installation is required to assure the correct fit and o-ring sealing. MTS factory assistance is recommended when designing for the rod style 'S' in all new RD4 applications.

Output options

The R-Series Model RD4 sensor is available in voltage, current, SSI, CANbus, DeviceNet, Profibus, EtherCAT® and EtherNet/IP outputs.

Important specification note:

For R-Series model specific specifications, consult the individual data sheets applicable to the sensor output(s) for your application.

Product specifications

Parameters	Specifications
OUTPUT	
Measured output variables:	Position, velocity, simultaneous multi-position and velocity measurements. (Measured output variables depend on the complete sensor model used.)
Resolution:	Output dependent
Update times:	Output dependent
Linearity deviation:	< ± 0.02% full stroke (minimum ± 50 µm)‡ ‡ For rod style 'S' the linearity deviation can be higher in the first 30 mm (1.2 in.) of stroke length.
Repeatability:	< ± 0.001% full stroke (minimum ± 2.5 µm)
Hysteresis:	< 4 µm, 2 µm typical
Outputs:	Voltage, current, SSI, CANbus, DeviceNet, Profibus, EtherCAT and EtherNet/IP
Stroke length:	25 to 5080 mm (1 to 200 in.) 25 to 2540 mm (1 to 100 in.) for rod style 'S'
ELECTRONICS	
Operating voltage:	**+24 Vdc nominal:** -15% or +20% **Polarity protection:** up to -30 Vdc **Over voltage protection:** up to 36 Vdc **Current drain:** Output dependent **Dielectric withstand voltage:** 500 Vdc (DC ground to machine ground)
ENVIRONMENTAL	
Operating conditions:	**Operating temperature:** Sensor electronics: Output dependent Sensor rod: -40 °C (-40 °F) to +100 °C (+212 °F) **Relative humidity:** 90% no condensation

Parameters	Specifications
EMC test‡:	**Electromagnetic emission:** IEC/EN 50081-1 **Electromagnetic susceptibility:** IEC/EN 50082-2 IEC/EN 61000-4-2/3/4/6, level 3/4 criterium A, CE qualified ‡ Sensor rod and interconnection cable is mounted inside a hydraulic housing or metal housing.
Shock rating:	100 g (single hit)/ IEC standard 68-2-27 (survivability)
Vibration rating:	10 g/10 to 2000 Hz, IEC standard 68-2-6
WIRING	
Connection type:	Connector or integral cable (output dependent)
ROD STYLE SENSOR (MODEL RD4)	
Electronic head:	Aluminum housing with diagnostic LED display. (LEDs located beside connector/cable exit)
Sealing:	**Sensor electronics:** IP 67 (with professionally mounted housing and connectors) **Sensor rod head with interconnection cable:** Threaded style (IP 65) and pressure fit style (IP 30)
Sensor rod:	304L stainless steel
Operating pressure:	350 bar static, 690 bar peak (5000 psi, 10,000 psi peak)
Mounting:	Any orientation. Threaded flange M18 x 1.5 or 3/4 - 16 UNF-3A or non-threaded pressure fit
Typical mounting torque:	45 N-m (33 ft. -Lbs.)
Magnet types:	Ring magnet, open-ring magnet or magnet float

Model RD4 sensor dimension references

R-SERIES RD4 SENSOR WITH SIDE CABLE ELECTRONICS CONNECTION AND ROD STYLE 'M' OR 'T'

Drawing is for reference only, contact applications engineering for tolerance specific information.

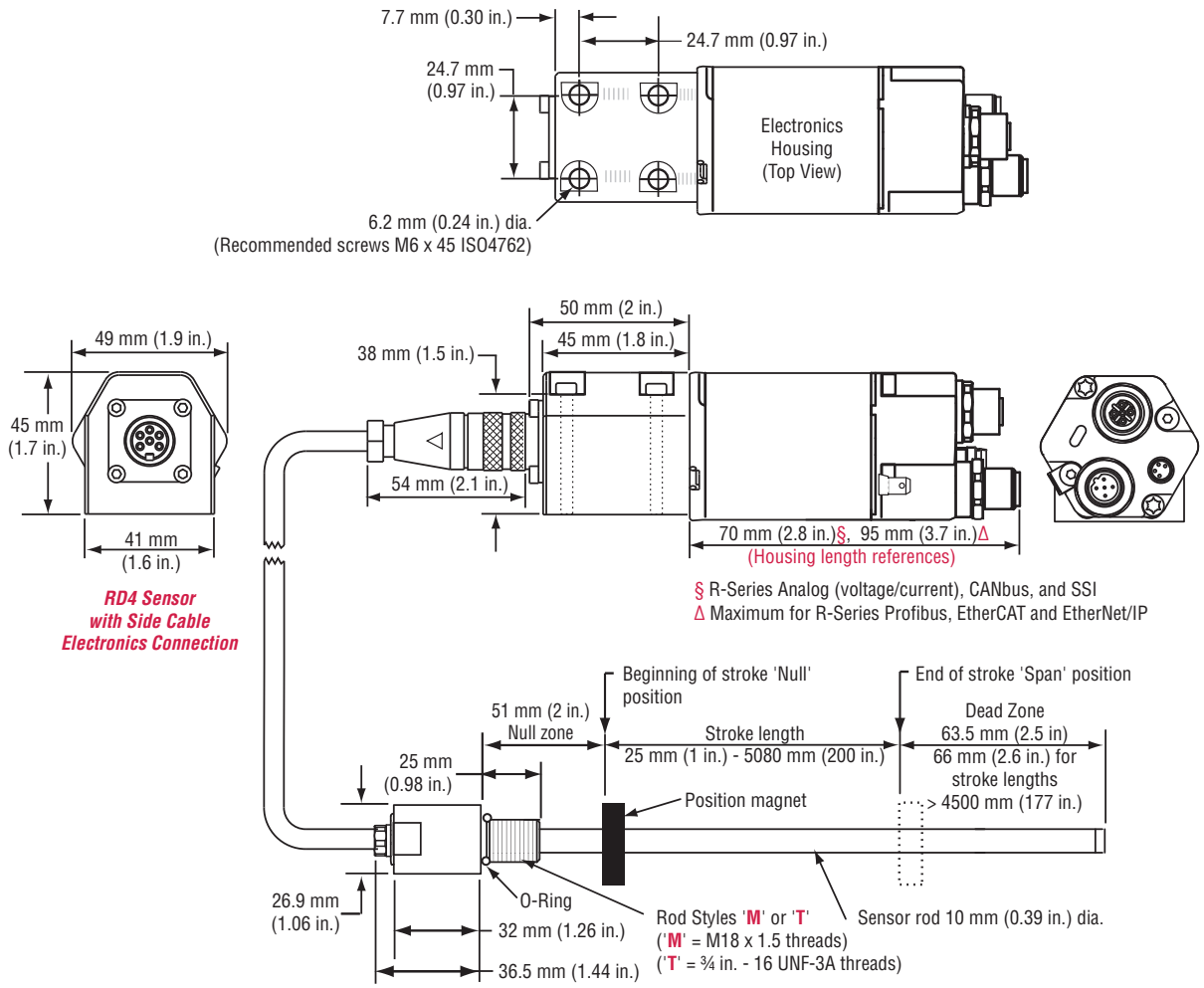

Figure 1. R-Series Model RD4 sensor with side cable electronics connection and rod style 'M' or 'T'

R-SERIES RD4 SENSOR WITH SIDE CABLE ELECTRONICS CONNECTION AND ROD STYLE 'C' OR 'D'

Drawing is for reference only, contact applications engineering for tolerance specific information.

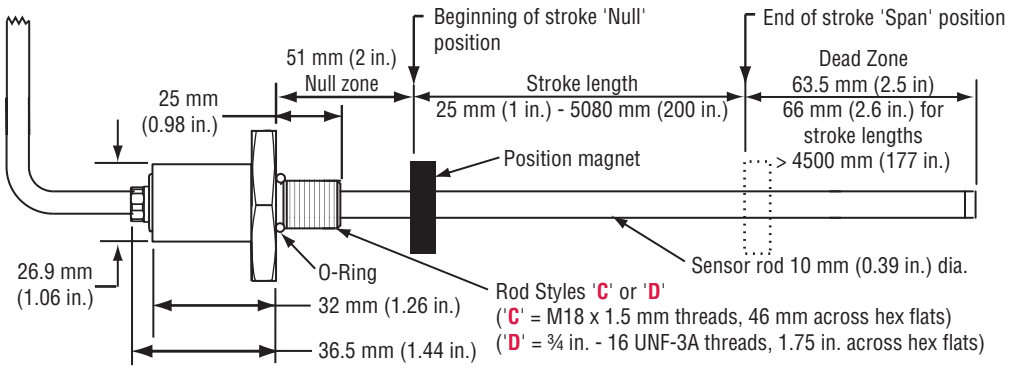

Figure 2. R-Series Model RD4 sensor with side cable electronics connection and rod style 'C' or 'D'

R-SERIES RD4 SENSOR WITH BOTTOM CABLE ELECTRONICS CONNECTION AND ROD STYLE 'S'
Drawing is for reference only, contact applications engineering for tolerance specific information.

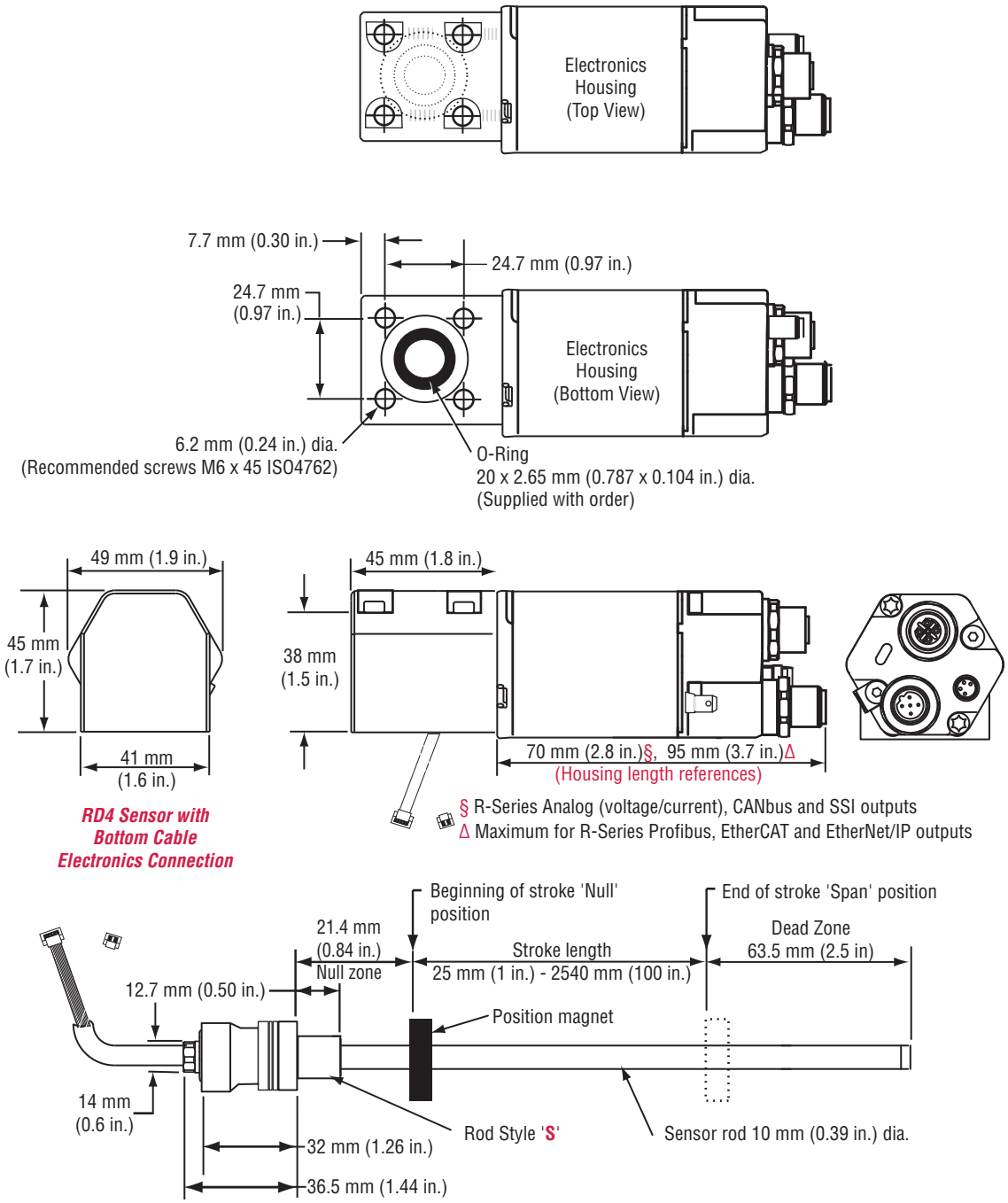

Figure 3. R-Series Model RD4 sensor with bottom cable electronics connection and rod style 'S'

Standard magnet selections (Model RD4)

Magnets must be ordered separately with Model RD4 position sensors. The standard ring magnet (part number 201542-2) is suitable for most applications.

Refer to the Accessories section of this catalog for magnet selections.

Sensor cylinder installation for side cable connection and threaded rod styles

Cylinder Installation Note:

The position magnet requires minimum distances away from ferrous metals to allow proper sensor output. The minimum distance from the front of the magnet to the cylinder end cap is 15 mm (0.6 in.). The minimum distance from the back of the magnet to the piston head is 3.2 mm (0.125 in.). However, a minimum distance of at least 5 mm (0.197 in.) is preferred for added performance margin. The non-ferrous spacer (part no.: 400633), provides this minimum distance when used along with the standard ring magnet (part no.: 201542-2).

R-SERIES RD4 SENSOR CYLINDER INSTALLATION WITH SIDE CABLE CONNECTION AND ROD STYLES 'M' AND 'T'

Drawing is for reference only, contact applications engineering for tolerance specific information.

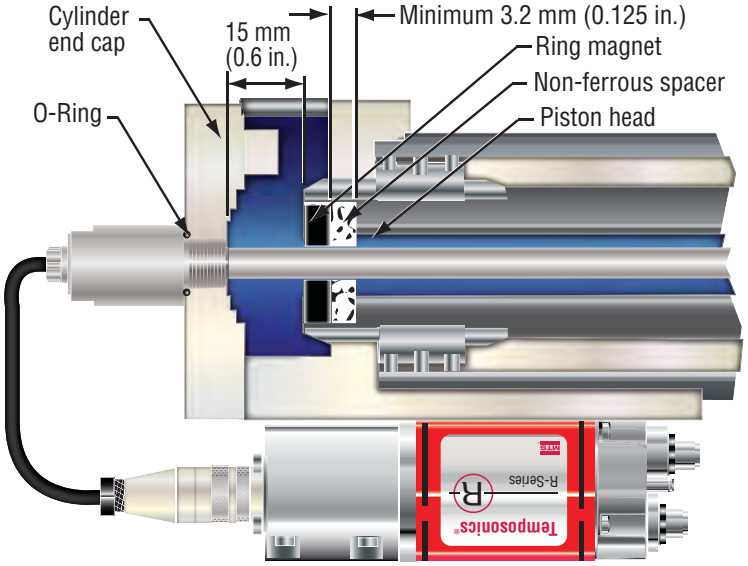

Figure 4. R-Series Model RD4 sensor installation using side cable connection and rod styles 'M' or 'T'

R-SERIES RD4 SENSOR CYLINDER INSTALLATION FOR SIDE CABLE CONNECTION AND ROD STYLES 'C' AND 'D'

Drawing is for reference only, contact applications engineering for tolerance specific information.

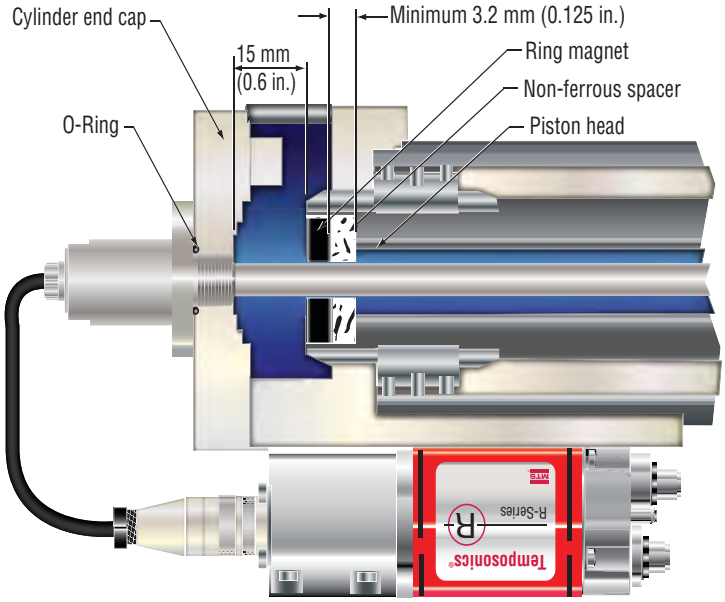

Figure 5. R-Series Model RD4 sensor installation using side cable connection and rod styles 'C' and 'D'

Sensor cylinder installation for bottom cable connection and pressure fit rod style

R-SERIES RD4 SENSOR CYLINDER INSTALLATION FOR BOTTOM CABLE CONNECTION AND PRESSURE FIT ROD STYLE 'S'
Drawing is for reference only, contact applications engineering for tolerance specific information.

Pressure fit rod style 'S' installation Notes:

1. The position magnet requires minimum distances away from ferrous metals to allow proper sensor output. When using rod style 'S' mounted inside a cylinder end cap, the minimum distance from the front of the magnet to the cylinder end cap is 21 mm (0.83 in.).
2. The minimum distance from the back of the magnet to the piston head is 3.2 mm (0.125 in.). However, a minimum distance of at least 5 mm (01.97 in.) is preferred for added performance margin. The non-ferrous spacer (part no.: 400633), provides this minimum distance when used along with the standard ring magnet (part no.: 201542-2).
3. In the event that the position magnet is to be secured in the piston head by using a ferrous circlip, then an additional non-ferrous spacer is recommended on the front side of the magnet (as shown below ‡).

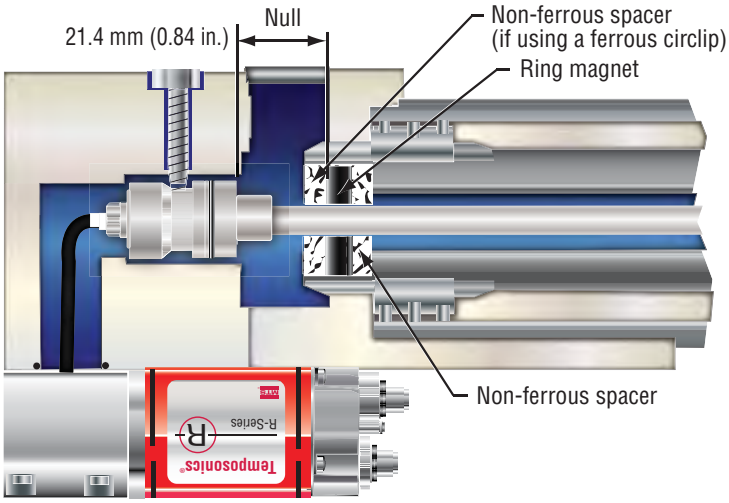

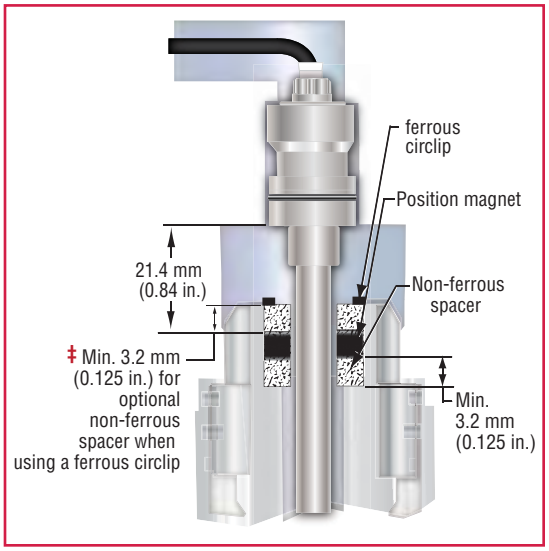

Figure 6. R-Series Model RD4 sensor installation using bottom cable connection and pressure fit rod style 'S'

Cylinder end cap mounting and pressure-fit rod style 'S' detail references

Drawings are for reference only, contact applications engineering for tolerance specific information.

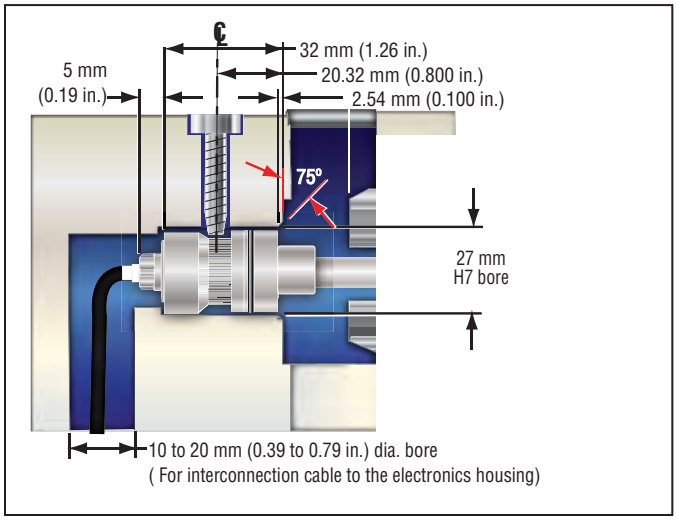

Figure 7. Cylinder end cap mounting detail reference

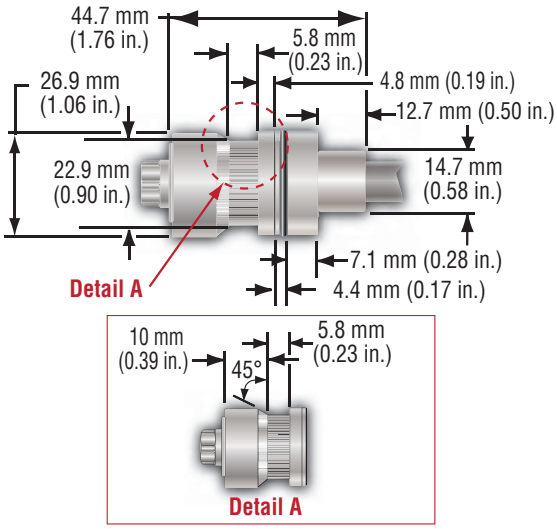

Figure 8. Pressure fit rod style 'S' details

(16 up to 26 depending on R-Series output)

R	D	4																							
1	2	3	4	5	6	7	8	9	10	11	12	13	14	15	16	17	18	19	20	21	22	23	24	25	26

To complete the sensor output model number, consult the specific ordering information page for the R-Series output you need.

SENSOR MODEL = R D 4 — **1-3**

RD4 = Model RD4 compact sensor with detatched electronics (Magnet must be ordered separately)

SENSOR ROD STYLE = ☐ — **4**

M = Metric threaded rod style, M18 x 1.5
C = Metric threaded hex flange style, M18 x 1.5
T = US customary threaded rod style ¾ -16 in.
D = US customary threaded hex flange style, ¾ -16 in.
S = Pressure fit style head

SENSOR ROD INTERCONNECTION CABLE = ☐☐ — **5-6**

For side connection into the electronics housing (requires housing option 'S' for designator no. 7)

D1 = 250 mm (9.8 in.), PUR jacket cable, hanging connector M16 male
D2 = 400 mm (15.7 in.), PUR jacket cable, hanging connector M16 male
D3 = 600 mm (23.6 in.), PUR jacket cable, hanging connector M16 male

For bottom connection into the electronics housing (requires housing option 'B' for designator no. 7)

R2 = 65 mm (2.6 in.), PUR jacket cable with wires terminated into 2 flat connectors
R4 = 170 mm (6.7 in.), PUR jacket cable with wires terminated into 2 flat connectors
R5 = 230 mm (9.1 in.), PUR jacket cable with wires terminated into 2 flat connectors
R6 = 350 mm (13.8 in.), PUR jacket cable with wires terminated into 2 flat connectors

SENSOR ELECTRONICS HOUSING STYLE = ☐ — **7**

S = Side cable electronics connection
B = Bottom cable electronics connection

STROKE LENGTH = ☐☐☐☐☐ — **8-12**

— — — — **M** = Millimeters *(Encode in 5 mm increments)*

— — — . — **U** = Inches and tenths *(Encode in 0.1 in. increments)*

OUTPUT CONNECTION TYPE *(Connector and integral cable options are dependent on output type selected)* = ☐☐☐ — **13-15**

OUTPUT (16 UP TO 26) = ☐☐☐ — **16-26**

Number designations (16 to 26) are dependent on the output type selected. To complete this ordering option, refer to the applicable product specific R-Series output (Analog, SSI, CANbus, DeviceNet, Profibus, EtherCAT or EtherNet/IP) data sheet for specific number designations. ***Note: Linearity Correction Option (LCO) is not available for RD4 model sensors.***

INPUT VOLTAGE NOTE: *number designation not required for input voltage (Standard 24 Vdc +20%, -15%) .*

R-Series RD4

Temposonics®

Magnetostrictive, Absolute, Non-contact
Linear-Position Sensors

R-Series Model RF
Flexible Housing Option

Data Sheet

Document Part Number
551081 Revision C

Model RF flexible housing option for R-Series sensors with voltage, current, SSI, CANbus, DeviceNet, Profibus, EtherCAT® and EtherNet/IP™ outputs

R-Series RF Flex

FEATURES

- Linear, Absolute Measurement Along an Arc
- LEDs For Sensor Diagnostics
- Non-Contact Sensing Technology
- Linearity Deviation Less Than 0.02%
- Repeatability Within 0.001%
- Flexible Housing is Optional For MTS R-Series Sensors With The Following Full Range of Outputs: Voltage, Current, SSI, CANbus, DeviceNet, Profibus, EtherCAT® and EtherNet/IP™
- Measuring Stroke Range: 255 mm (10 in.) to 10,060 mm (396 in.) *(Contact factory for longer stroke lengths)*

BENEFITS

- Rugged Industrial Sensor
- Multi-Magnet Position Measurement: Up to 20 Positions
- 100% Field Adjustable Null And Span Setpoints
- Cost Effective, Convenient Shipping for Long Measuring Lengths

APPLICATIONS

- Hydraulic Cylinder Applications with Limited Sensor Installation Space
- Accurate Position Measurement Along an Arc
- Very Long Measurement Lengths

TYPICAL INDUSTRIES

- Fluid Power
- Steel Mills Using Long Cylinders
- Material Handling and Packaging
- Woodworking, Metalworking and Assembly Tools
- Converting Machines

EtherNet/IP™ is a trademark used under license by ODVA.
EtherNet/IP CONFORMANCE TESTED™ is certification mark of ODVA.

Product overview

MTS offers the Model RF Flexible housing as an option with our R-Series family of extremely robust, highly accurate, linear-position sensors.

Constructing a R-Series sensor with the RF flexible housing results in a flexible style sensor that offers trouble-free performance in applications that require very long stroke lengths and linear measurements on an arc.

The Model RF flexible sensors are available in all R-Series sensor outputs including analog, serial, digital, and bus interfaces. Standard stroke lengths for the sensor are up to 10 meters (396 in.) and for special applications, longer lengths are available by consulting the factory.

Flexible sensors incorporate the Temposonics SE (Sensing Element) technology that is the same building block all MTS sensor models use. The SE is housed in a fluoroelastomer coated stainless steel housing that is flexible and can be bent in an arc to an 8 inch minimum bend radius.

Most operating parameters are identical to their rigid cousins. Model RF sensors are recommended for long-length applications because they are simply coiled inside a 40-inch diameter box for shipping, which simplifies logistics and handling.

The model RF sensor can easily bend around corners or obstacles and provides a simple solution for applications where installation space is too confined, or has limited access, making installation or replacement too difficult and costly for a standard rigid type sensor.

Output options

The Model RF Flexible Housing option is available for R-Series Sensors with voltage, current, SSI, CANBus, DeviceNet, Profibus, EtherCAT and EtherNet/IP outputs.

Important specification notes:

1. For R-Series model specific specifications, consult the individual R-Series data sheets applicable to the sensor output(s) being used.
2. All sensors constructed with the flexible housing have their specifications measured while laying flat.

*Sensor's flexible rod is installed inside the optional stainless steel half inch O.D. pressure pipe housing.

Product specifications

Parameters	Specifications
OUTPUT	
Measured output variables:	Position, velocity, simultaneous multi-position and velocity measurements. (Measured output variables depend on the complete sensor model used.)
Resolution:	Output dependent
Update times:	Output dependent
Linearity deviation:	< ± 0.02% full stroke (minimum ± 100 µm) Linearity Correction Option (LCO) available for some R-Series models
Repeatability:	< ± 0.001% full stroke (minimum ± 2.5 µm)
Hysteresis:	< 4 µm, 2 µm typical
Outputs:	Voltage, current, SSI, CANbus, DeviceNet, Profibus, EtherCAT and EtherNet/IP
Measuring range:	255 to 10,060 mm (10 to 396 in.) (Contact factory for longer stroke lengths)
ELECTRONICS	
Operating voltage:	**+24 Vdc nominal:** -15% or +20% **Polarity protection:** up to -30 Vdc **Over voltage protection:** up to 36 Vdc **Current drain:** Output dependent **Dielectric withstand voltage:** 500 Vdc (DC ground to machine ground)
ENVIRONMENTAL	
Operating conditions:	**Operating temperature:** -40 °C (-40 °F) to +75 °C (+167 °F) **Relative humidity:** 90% no condensation
EMC test:*	**Emissions:** IEC/EN 50081-1 **Immunity:** IEC/EN 50082-2 IEC/EN 61000-4-2/3/4/6, level 3/4 criterium A, CE qualified
Shock rating:	100 g (single hit)/ IEC standard 68-2-27 (survivability)
Vibration rating:	5 g/10 to 2000 Hz, IEC standard 68-2-6 (operational)
WIRING	
Connection type:	Connector or integral cable (output dependent)
ROD STYLE SENSOR (MODEL RF)	
Electronic head:	Aluminum die cast housing with diagnostic LED display (LEDs located beside connector/cable exit)
Sensor stroke:	Flexible stainless-steel pipe (PTFE plastic coated), minimum bend radius 200 mm (8 in.)
Sealing:	**IP30:** (IP67 or IP68 rating when installed inside the optional 1/2 inch O.D. pressure housing pipe)
Mounting:	Any orientation. Threaded flange M18 x 1.5 or 3/4 - 16 UNF-3A
Magnet types:	Ring magnet or open-ring magnet or block magnet

Model RF flexible housing option dimension references

R-SERIES SENSOR WITH MODEL RF FLEXIBLE HOUSING OPTION

Drawing is for reference only, contact applications engineering for tolerance specific information.

Notes:

1. Total sensor length tolerances are:
   +8 mm (0.3 in.)/-5mm (0.2 in.) up to 7600 mm (300 in.) stroke length.
   +15 mm ((0.6 in.)/-5 mm (0.2 in.) over 7600 mm (300 in.) stroke length.
2. Tolerances of total length do not influence the measuring stroke length.

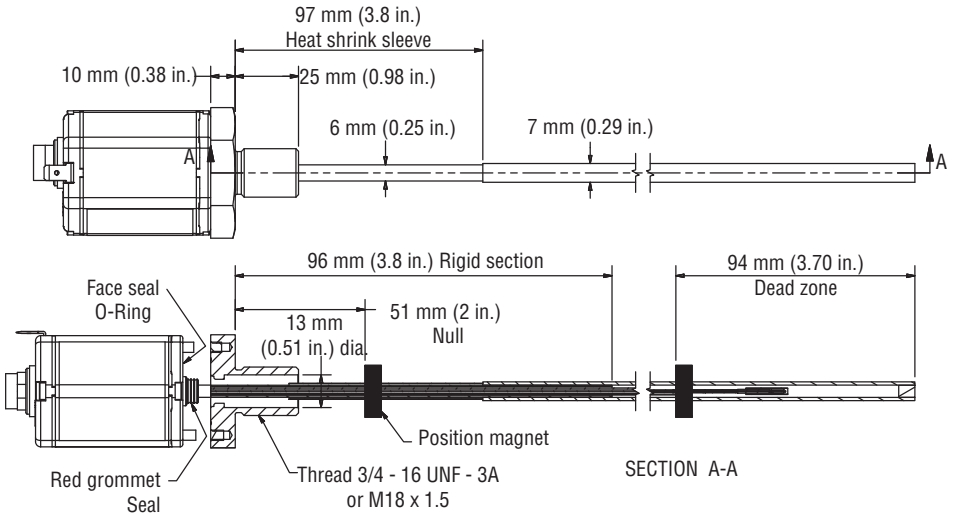

Figure 1. R-Series Model RF flexible housing dimension reference

Standard magnet selections (Model RF)

Magnets must be ordered separately with Model RF position sensors.

Refer to the Accessories section of this catalog for magnet selections and detailed mounting and installation information.

R-Series RF Flex

Sensor mounting and Installation references

R-SERIES MODEL RF SENSOR MOUNTING AND INSTALLATION *Flexible installation in any position!*

The model RF flexible sensor housing can be mounted to provide straight or curvilinear measurements. The sensor's flexible housing requires supports or anchoring to maintain proper alignment between the sensor rod and the magnet. Without proper alignment, the sensor's output signal can be interrupted or lost.

A hex flange comes mounted on the sensor head having either U.S. customary threads (3/4 - 16 UNF inches) or metric threads (M18 x 1.5). The flange is secured to the sensor head by 2 metric screws (M4 x 59 mm, 2.5 mm hex socket head). The flange can be used, or removed, to best accommodate the installation requirements. If the sensor is mounted without the flange, the red grommet seal can be cut off to provide a flush mounting surface for the sensor's face seal O-Ring *(shown in 'Figure 1' and 'Figure 2')*.

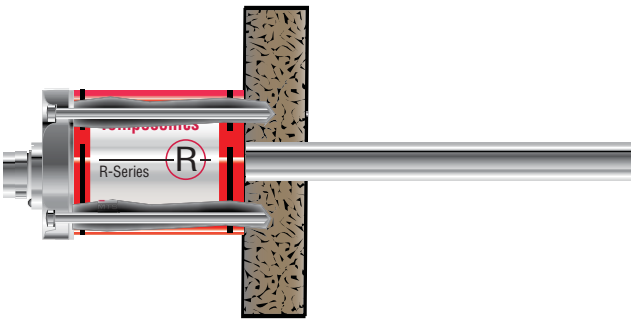

Figure 2. Installation example for flush mounting with red grommet seal removed.

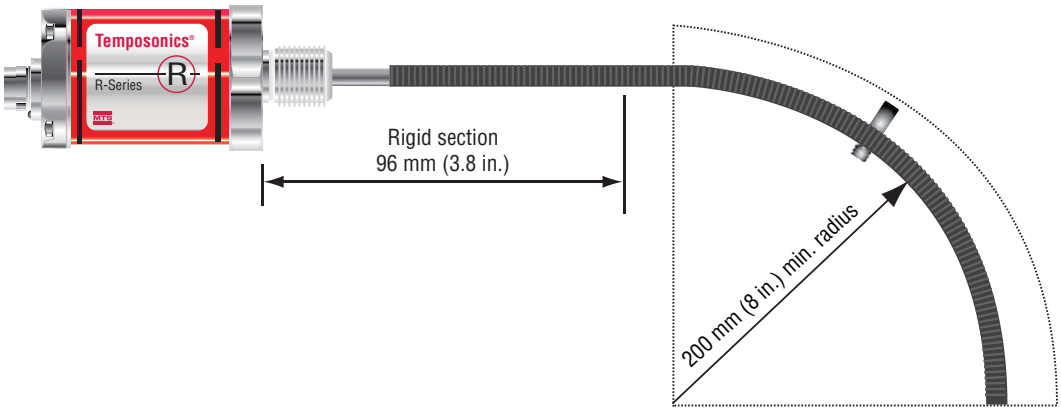

Figure 3. Installation example showing minimum bend radius for curvilinear measurements.

Most applications require that the RF flexible sensor housing be supported, such as, placed inside a guide pipe made of non-ferrous material, straight or bent to the desired shape.

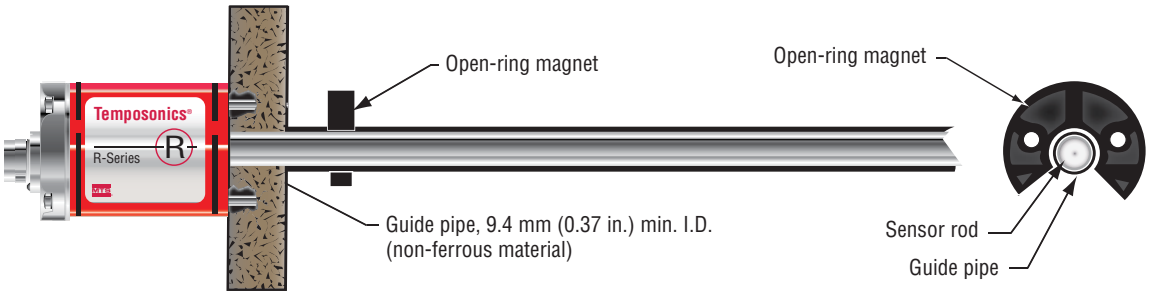

Figure 4. Installation example using non-ferrous guide pipe (customer supplied).

When installed inside the MTS half-inch O.D. pressure housing pipe, the RF flexible sensor housing is suitable for use in hydraulic cylinders, and can simplify installation where installation or mounting space is limited *(see 'Figure 7')*.

Half inch O.D. pressure pipe and flange (Optional)

PIPE AND FLANGE SELECTIONS

The half inch O.D. pressure pipe with flange is designed specifically for R-Series sensors with the model RF flexible housing option. The pressure pipe and flange provide protection from high pressures, as found in hydraulic cylinders, up to 5,000 psi static, 10,000 psi spike. For large cylinders, using the half-inch O.D. pressure pipe requires a larger gun-drilled bore in the piston head/rod assembly. Typically, a 0.75 inch bore is used to match the I.D. of the ring magnet used *(e.g. part no.: 201554 or part no.: 400424).*

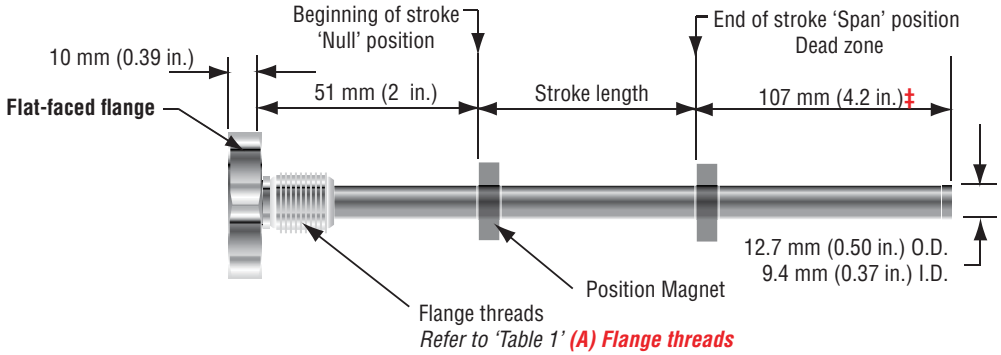

‡ (4.2 in. dead zone = 3.7 in. dead zone of RF sensor +0.5 in. gap)

Figure 5. Style '**HL**' pressure pipe (flat-faced flange shown with U.S. customary threads)

HALF INCH O.D. PRESSURE HOUSING PIPE AND FLANGE SELECTIONS (CONTINUED)

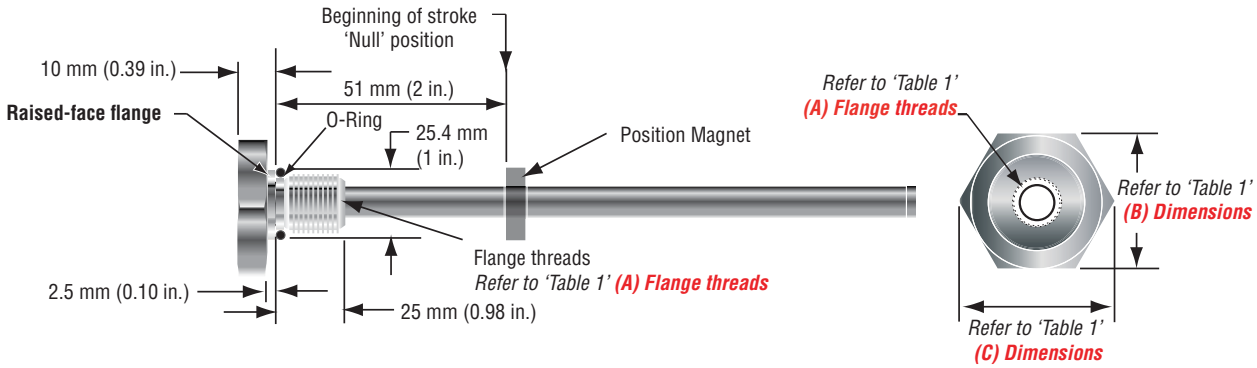

Figure 6. Style '**HP**' pressure pipe (raised-face flange shown with U.S. customary threads)

FLANGE TYPE	DESCRIPTION	(A) FLANGE THREADS	(B) DIMENSIONS	(C) DIMENSIONS
HP	US customary threads with raised-face flange	3/4" - 16 UNF-3A	1.75 in.	2 in.
HL	US customary threads with flat-faced flange	3/4" - 16 UNF-3A	1.75 in.	2 in.
HD	Metric threads with flat-faced flange	M18 x 1.5	46 mm	53 mm

Table 1. Flange options and specifications

R-Series Model RF Flexible Housing Option
Pressure Pipe and Flange Installation

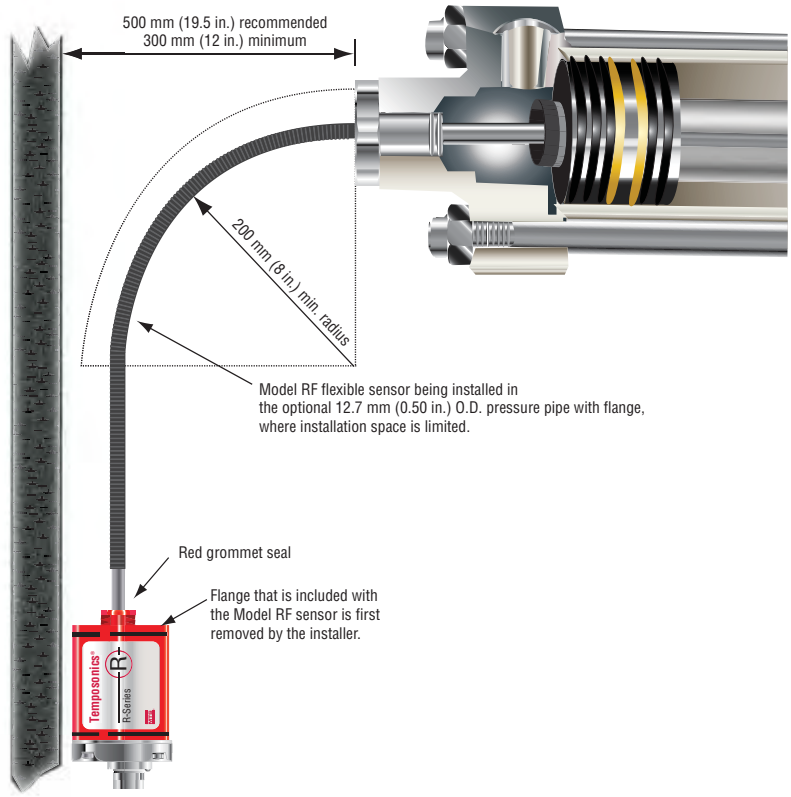

Figure 7. Installation example using optional 12.7 mm (0.50 in.) O.D. pressure pipe inside hydraulic cylinder

H						
1	2	3	4	5	6	7

HALF INCH O.D. PRESSURE PIPE AND FLANGE STYLE = H 1-2

HL = US customary threads, flat-faced flange and 1/2 inch pressure pipe

HP = US customary threads, raised-faced flange and 1/2 inch pressure pipe,

HD = Metric threads, flat-faced flange and 1/2 inch pressure pipe

STROKE LENGTH = 3-7

— — — — **M** = Millimeters
(Encode in 5 mm increments)

— — — . — **U** = Inches and tenths
(Encode in 0.1 in. increments)

Stroke Length Notes:

1. Half inch O.D. pressure pipe and flange stroke range = 255 mm (10 in.) to 5840 mm (230 in.)
2. Contact factory for longer lengths.

Ordering examples:
HL0120U = 1/2 inch O.D. pressure pipe with flat-faced flange, US customary threads, for a 12.0 inch stroke length
HD1000M = 1/2 inch O.D. pressure pipe with flat-faced flange, metric threads, for a 1000 mm stroke length

Ordering Information
R-Series Model RF Flexible Housing Option

R	F							
1	2	3	4	5	6	7	8	9

To complete the sensor model number, consult the specific ordering information page for the R-Series model you need.

R-SERIES HOUSING MODEL = R F 1-2

RF = Flexible style

Magnet must be ordered separately.

FLANGE TYPE = 3

S = US customary threads, flat-faced flange

M = Metric threads, flat-faced flange

STROKE LENGTH = 4-9

— — — — — **M** = Millimeters
(Encode in 5 mm increments)

— — — —. — **U** = Inches and tenths
(Encode in 0.1 in. increments)

Stroke Length Notes:

1. Flexible housing style sensor (model RF) stroke range = 255 mm (10 in.) - 10,060 mm (396 in.)
2. Contact factory for longer lengths.

Sensor Parameters
Refer to the individual R-Series data sheet to complete the order number beyond position '9' for outputs: Analog, SSI, CANbus, DeviceNet, Profibus, EtherCAT, and EtherNet/IP.

Ordering Examples:

RFS**03937U**D701S1B1100 = 393.7 in. stroke length for RF sensor with SSI output

RFM**10000M**D631P102 = 10,000 mm stroke length for RF sensor with Profibus output

Temposonics®

Magnetostrictive, Absolute, Non-contact
Linear-Position Sensors

R-Series
Rod Model RS

Data Sheet

Document Part Number
551251 Revision B

Model RS Rod-style sensor with IP68/IP69K Super Shield Housing

FEATURES

- Robust Sealed Housing IP68/IP69K
- Analog, SSI, DeviceNet, Profibus, EtherCAT and CANbus Outputs

BENEFITS

- Available for R-Series Rod-Style Sensors
- Rugged Industrial Sensor
- Linear, Absolute Measurement
- Non-Contact Sensing Technology

APPLICATIONS

- Ideal For Hydraulic and Pneumatic Cylinders in Wash Down Environments
- Continuous Operation In Harsh Industrial Conditions
- Additional Protection for Exposed Outdoor Environments

TYPICAL INDUSTRIES

- Fluid Power
- Material Handling and Packaging
- Valve and Gate Positioning

R-Series
RS

Product overview

The extremely robust Temposonics® Rod-style Model RS sensor with super shield housing ensures long-term linear position measurement in the harshest environments. Hermetically sealed with a housing completely made of stainless steel, it meets protection modes IP68 and IP69K requirements and are reliably shielded against corrosion and penetration of dirt and water.

Due to non-contact measuring technology, sensor integration into a hermetically sealed housing is possible. A position magnet moves along the outside of the pressure-resistant sensor pipe and marks the position without mechanical contact.

For level measurement, an optional float can be used. The modular sensor cartridge design enables the customer to choose the specific sensor output configurations to be installed within the super shield housing to best fit their application requirements. The measuring accuracy and all technical data correspond to the features of the sensor selected inside the housing.

A wide choice of interfaces (Analog, Profibus, SSI, CANbus, DeviceNet and EtherCAT) is available. Moreover, integration of ATEX-certified and intrinsically safe sensors is possible with the protective housing. For specific information, refer to the specific R-Series sensor data sheet.

Temposonics® Model RS sensors are made to fit Temposonics® R-Series with analog and digital outputs. Fixed cable and connector versions can be used on the sensor side. When using standard sensors in this housing, you get a cost efficient solution for use in rugged applications. Several design combinations are available to fit your application: M18 or 3/4" UNF mounting flange thread, various housing lengths, and single, dual or triple cable glands.

Serial communication and a simple PC-based user interface enable remote sensor programmability and diagnostics without the need to compromise the housing's protection rating. These features can be used to simplify machine design, sensor setup and field programming.

Product specifications

Consult the individual R-series sensor data sheet for product specifications and ordering information at ***www.mtssensors.com***

Parameters	Specifications
OUTPUT	
Outputs:	Analog, SSI, Profibus, EtherCAT, CANbus and DeviceNet
Stroke length:	**Range (Rod style):** 50 mm to 7620 mm (2 in. to 300 in.)
ENVIRONMENTAL	
Operating conditions:	**Relative humidity:** 100% **Sealing:** IP68/IP69K
FORM FACTOR MATERIAL (MODEL RS)	
Electronic head:	303/304 stainless steel or 316L on request
Sensor rod:	303/304 stainless steel or 316L on request
Operating pressure:	350 bar static, 690 bar peak (5000 psi static, 10,000 psi peak)
Mounting:	Any orientation. Threaded flange M18 x 1.5 or 3/4 - 16 UNF-3A
Typical mounting torque:	45 N-m (33 ft. - lbs.)
Magnet types:	Ring magnet, open-ring magnet, or magnet float

Model RS rod-style sensor dimension reference

The Temposonics R-Series rod-style sensor (Model RS) offers modular construction, flexible mounting configurations, and easy installation. The Model RS sensor is designed for mounting in applications where high pressure conditions exist, (5000 psi continuous, 10,000 psi spike), such as inside hydraulic cylinders. The Model RS sensor may also be mounted externally in many applications.

MODEL RS, ROD-STYLE SENSOR WITH IP68/IP69K HOUSING

Drawing is for reference only, contact applications engineering for tolerance specific information.

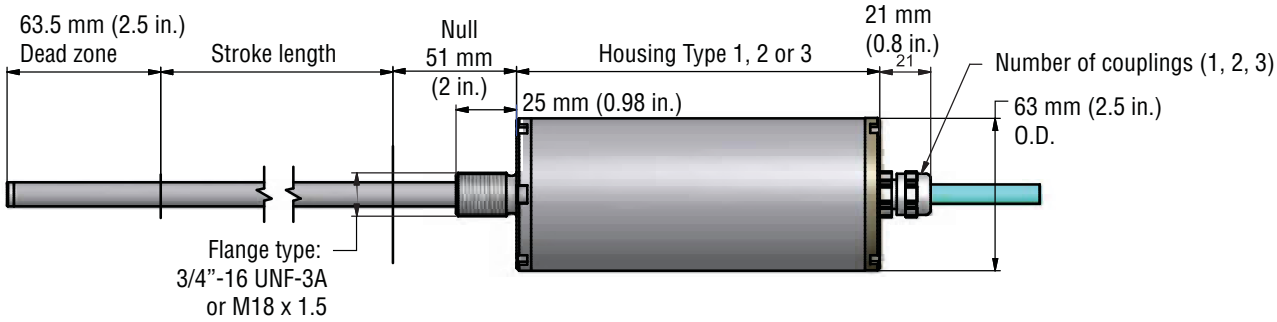

Figure 1. Model RS Rod-style sensor dimension reference. (See Figures 5, 6 and 7 for cable gland exits)

MODEL RS, ROD-STYLE SENSOR WITH TYPE 1 HOUSING

Drawing is for reference only, contact applications engineering for tolerance specific information.

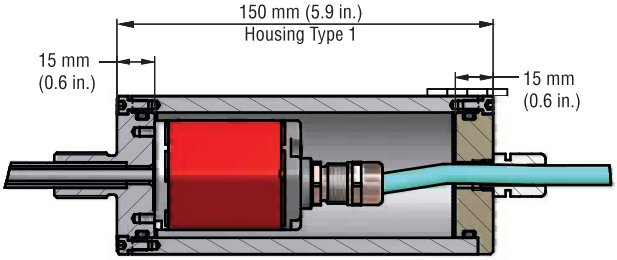

Figure 2. Model RS Rod-style sensor dimension reference (shown with ***Type 1*** housing)

MODEL RS, ROD-STYLE SENSOR WITH TYPE 2 HOUSING

Drawing is for reference only, contact applications engineering for tolerance specific information.

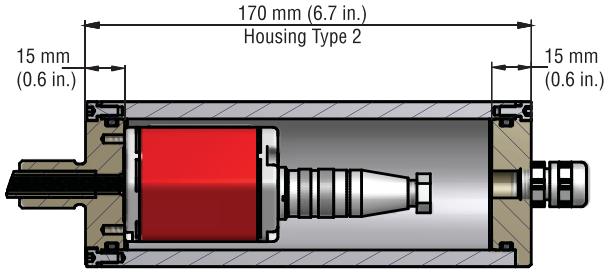

Figure 3. Model RS Rod-style sensor dimension reference (shown with ***Type 2*** housing)

MODEL RS, ROD-STYLE SENSOR WITH TYPE 3 HOUSING

Drawing is for reference only, contact applications engineering for tolerance specific information.

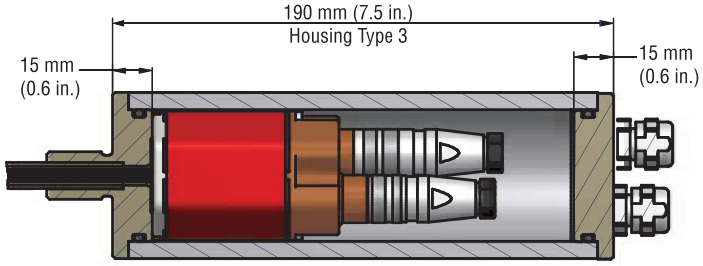

Figure 4. Model RS Rod-style sensor dimension reference (shown with ***Type 3*** housing)

Single, dual or triple cable glands are required for your specific R-Series Rod-style sensor selection (as shown in Figures 5, 6 and 7). Consult the R-Series Sensor Data Sheet for specific connection, wiring and mounting information.

MODEL RS, ROD-STYLE SENSOR CABLE GLAND EXITS

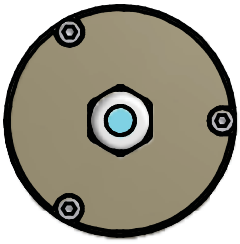

Figure 5. Model RS Rod-style sensor (shown with ***Single*** cable gland exit)

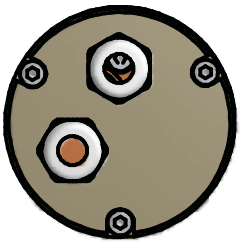

Figure 6. Model RS Rod-style sensor (shown with ***Dual*** cable gland exit)

Figure 7.

R	S						
1	2	3	4	5	6	7	8

SENSOR MODEL = R S — 1-2

RS = Rod style sensor with Super Shield Housing

PRESSURE PIPE FLANGE = ☐ — 3

M = Flange M18 x 1.5 **S** = Flange 3/4 in. -16 UNF - 3A

STROKE LENGTH = ☐☐☐☐☐ — 4-8

— — — — **M** = Millimeters
(Encode in 5 mm increments)

— — — . — **U** = Inches and tenths
(Encode in 0.1 in. increments)

Stroke Length Notes:
Rod-style sensor (model RS) stroke range = 50 mm (2 in.) - 7620 mm (300 in.)

SENSOR PARAMETERS
Refer to the individual R-Series data sheet **to complete the order number beyond position '8'** for outputs: Analog, SSI, CANbus, DeviceNet, Profibus and EtherCAT.

Temposonics®

Magnetostrictive, Absolute, Non-contact
Linear-Position Sensors

G-Series Models GP and GH

Analog (Voltage/Current)/Digital-Pulse Outputs

Data Sheet

MTS SENSORS

Document Part Number
550959 Revision G

Model GP Profile-style position sensor

Model GH Rod-style position sensor

FEATURES

- Linear, Absolute Measurement
- Non-Contact Sensing Technology
- LEDs For Enhanced Sensor Diagnostics
- Programmability, Analog Output Models:
  Voltage or Current, Fully Adjustable Outputs Within:
  -10 to +10 Vdc or 0 to 20 mA
- Programmability, Digital-Pulse Output Models:
  PWM or Start/Stop
- Simultaneous Multi-Magnet Measurements Using Start/Stop
- Linearity Deviation Less Than 0.02%
- Repeatability Within 0.001%
- Designed for Backward Compatibility with Legacy Temposonics Products
- Standard 24 Vdc and extended input power supply options for compatibility with older controller interfaces
- Integral connector replacement options including: Hanging (inline) connectors, Adapter cables, Field-installed connector kits

BENEFITS

- Rugged Industrial Sensor, Backward Compatible with Tempo I, Tempo II and L-Series Legacy Products
- Compact electronics housing for applications with limited space
- Offers Supply Options for Compatibility with Older Controller Interfaces

APPLICATIONS

- Continuous Operation In Harsh Industrial Conditions
- High Pressure Conditions

TYPICAL INDUSTRIES

- Fluid Power
- Lumber and Woodworking
- Stamping and Diecasting
- Metalworking, Presses and Assembly Tools
- Material Handling and Packaging

G-Series Analog/Digital

ISO 9001 CERTIFIED

Product overview

G-Series sensors feature a microprocessor-based design with enhanced diagnostics and programmability offering the flexibility to fit a wide range of applications. The sensor's head contains the active signal conditioning and a complete integrated electronics interface. Double shielding is used to ensure EMI protection for unsurpassed reliability and operating safety. G-Series model GH and GP sensors are extremely robust and are ideal for continuous operation under harsh industrial conditions. Backward compatibility with upgraded performance is one of the primary benefits of choosing a G-Series sensor. The G-Series sensor provides the same functionality as our legacy Temposonics I, II and L-Series sensor products which make it an ideal direct replacement.

MTS offers two standard sensor housings, rod and profile extrusion. The rod housing is capable of withstanding high pressures such as those found in hydraulic cylinders. The profile extrusion housing provides convenient mounting options and captive-sliding magnets which utilize slide bearings of special material that reduce friction, and help mitigate dirt build up.

Product specifications

Parameters	Specifications
OUTPUT	
Measured output variables:	Position
Resolution:	Analog: Infinite (restricted by output ripple) **Digital Pulse:** 0.1, 0.01 and 0.005 mm (controller dependent)
Update times:	Analog: < 1 ms (typical) Digital (Controller dependent, design reference) = (null + stroke+ dead zone) inches x 10.0 µsec/in. x (number of circulations)
Linearity deviation:	< ± 0.02%full stroke (minimum ± 50 µm)
Repeatability:	< ± 0.001% full stroke (minimum ± 2.5 µm)
Hysteresis:	< 4 µm
Analog Outputs:	**Voltage (Fully adjustable):** 0 to 10, 10 to 0, -10 to +10, +10 to -10 Vdc (minimum controller load > 5k ohms) **Current (Fully Adjustable):** 4(0) to 20 mA, 20 to 4(0) mA (Minimum/maximum load, 0/500 ohms)
Digital-Pulse Outputs:	Start/Stop or Pulse Width Modulation (PWM)
Stroke Lengths:	**GP (Profile style):** Analog: 50 to 2540 mm (2 to 100 in.)Δ Digital: 50 to 5080 mm (2 to 200 in.) **GH (Rod style):** Analog: 50 to 2540 mm (2 to 100 in.)Δ Digital: 50 to 7620 mm (2 to 300 in.) Δ *Contact factory for stroke lengths longer than 2540 mm (100 in.) for Analog outputs*
ELECTRONICS	
Operating voltage:	**+24 Vdc nominal:** 20.4 - 28.8 Vdc standard +9 to +28.8 Vdc optional* **Polarity protection:** up to -30 Vdc **Over voltage protection:** Up to 36 Vdc **Dielectric withstand voltage:** 500 Vdc (DC ground to machine ground).
Setpoints:	**Setpoint adjustment (Null/Span):** 100% of electrical stroke length, 50 mm (2 in.) min. distance between setpoints.

* UL Recognition requires an approved power supply with energy limitation (UL 61010-1), or Class 2 rating according to the National Electrical Code (USA) / Canadian Electrical Code.

** The IP rating is not part of the UL Recognition.

Parameters	Specifications
ENVIRONMENTAL	
Operating conditions:	**Operating temperature:** -40 °C (-40 °F) to 80 °C (176 °F) 85 °C (185 °F) max.‡ ‡ *+80 °C max. for UL Recognition. Contact factory for high temperature applications.* **Relative humidity:** 90% no condensation
EMC test:	**Emissions:** IEC/EN 61000-6-3 **Immunity:** IEC/EN 61000-6-2 IEC/EN 61000-4-2/3/4/5/6/8, level 3/4 criterium A, CE qualified
Shock rating:	100 g (single hit)/ IEC standard 68-2-27 (survivability)
Vibration rating:	15 g (30 g with HVR option)/10 to 2000 Hz, IEC standard 68-2-6 (operational)
WIRING	
Connection type:	6-pin male D60 (M16) connector, 10-pin MS style connector, integral cable, or hanging (inline) connectors
PROFILE STYLE SENSOR (MODEL GP)	
Electronic head:	Aluminum housing with diagnostic LED display (LEDs located beside connector/cable exit)
Sealing:	IP 65**
Sensor extrusion:	Aluminum (Temposonics profile style)
Mounting:	Any orientation, adjustable mounting feet or T-slot nut (M5 threads) in bottom groove
Magnet types:	Captive-sliding magnet or open-ring magnet
ROD STYLE SENSOR (MODEL GH)	
Electronic head:	Aluminum housing with diagnostic LED display (LEDs located beside connector/cable exit)
Sealing:	IP 67 or IP 68 for integral cable models**
Sensor rod:	304L stainless steel
Operating pressure:	350 bar static, 690 bar peak (5000 psi static, 10,000 psi peak)
Mounting:	Any orientation. Threaded flange M18 x 1.5 or 3/4 - 16 UNF-3A
Typical mounting torque:	45 N-m (33 ft. - lbs.)
Magnet types:	Ring magnet, open-ring magnet, or magnet float

G-Series Analog/Digital

Output options

G-Series profile-style and rod-style sensors are available in analog and digital-pulse outputs. The G-Series sensor can also provide a square wave neuter output to support legacy Temposonics I, II, and L-Series product backward compatibility.

ANALOG OUTPUTS (VOLTAGE/CURRENT)

G-Series analog sensors provide direct signals, including voltage (0 to 10 Vdc or -10 to +10 Vdc, forward or reverse acting) and current (4 to 20 mA, or 0 to 20 mA, forward or reverse acting). *(See 'Figure 1').* Both voltage and current outputs allow full adjustments of null and span setpoints, (minimum 2 in. between setpoints). Since the outputs are direct, no signal-conditioning electronics are needed when interfacing with controllers or meters.

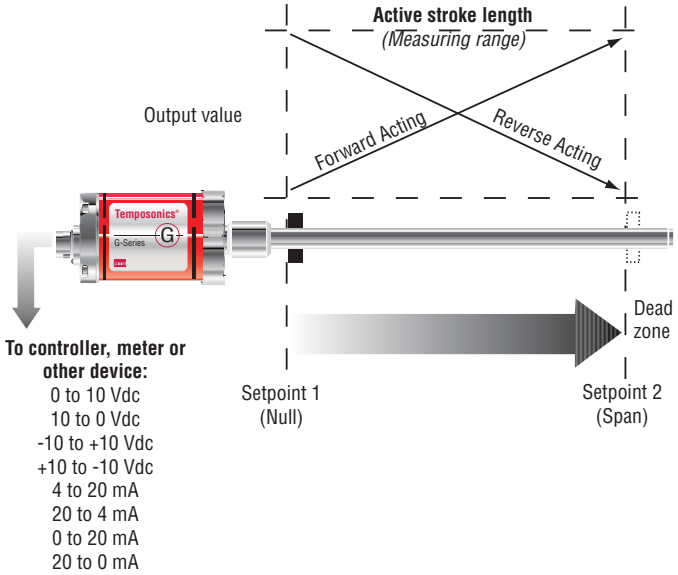

Figure 1. Single magnet analog output diagram

DIGITAL-PULSE OUTPUTS (START/STOP AND PWM)

G-Series digital-pulse sensors provide either PWM (Pulse Width Modulation) or Start/Stop output signals *(see 'Figure 2').* For Start/Stop, the sensor requires a start signal from a controller or interface module to initiate the measurement cycle. The sensor generates a stop signal at the end of the measurement cycle that is used to stop the controller's counter clock.

The elapsed time between the start and stop signals is directly proportional to the magnet's position along the active stroke length. The controller can calculate the absolute position of the magnet from the time value and the sensor's unique gradient value, (inverse of the speed for the sonic strain pulse traveling in the sensor's waveguide).

For PWM output, the elapsed time of the measurement cycle is represented as a varying pulse width of the output signal. The duration of the pulse is directly proportional to the magnet's position along the active stroke length. When operated in the PWM mode the sensor can be configured for internal interrogations or external interrogations. Using external interrogations, a signal is required from the controller or interface module to initiate every measurement cycle (i.e. same as Start/Stop). When using the mode for internal interrogations, no signal is needed from the controller as the sensor itself initiates the next measurement cycle upon the completion of the current cycle. Sensor resolution can be improved by using multiple back to back measurement cycles that are grouped together to generate a single PWM output signal.

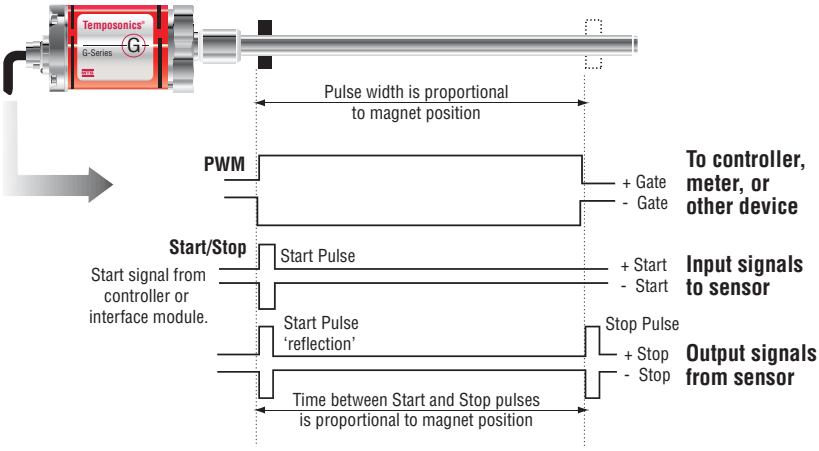

Figure 2. Direct Start/Stop and PWM output diagram

Using multiple measurement cycles in this fashion is referred to as circulations. Setting the sensor to use 2 circulations improves the measurement resolution 2 times. Likewise, using 3 circulations improves the resolution 3 times, and so on. When using multiple circulations the resulting pulse width is longer, indicating the total time elapsed for all of the circulations added together. Once this elapsed time is measured by the counter clock in the controller, the time value is divided by the number of circulations used. The result can then be divided by the sensor's gradient value to determine the magnet's absolute position.

Using multiple circulations will slow down the sensor's update time. However, using multiple circulations has the same effect for improving the measured resolution as it would be to increase the frequency of the counter clock in the controller (Xtal [MHz]), as indicated in the equation below.

$$\text{Resolution (in.)} = \frac{1}{(\text{gradient } \mu\text{s/in.}) \times (\text{Xtal [MHz]}) \times (\#\text{ of circulations})}$$

G-Series Analog/Digital

Enhanced monitoring and diagnostics

SENSOR STATUS AND DIAGNOSTIC DISPLAY

Diagnostic LEDs (green/red) located beside the connector or cable exit *(see 'Figure 3')*, provide basic visual monitoring for normal sensor operation and troubleshooting.

Figure 3. G-Series sensor diagnostic LEDs

Green	Red	Operation status/mode
OFF	OFF	No power to sensor
OFF	ON	Self-diagnostic error
ON	OFF	Normal sensor function
ON	ON	Magnet not detected
ON	FLASHING	Missing external Start/interrogation signal
FLASHING	OFF	Serial programming mode
FLASHING	ON	Magnet signal is weak
FLASHING	FLASHING	Supply voltage beyond limits (high or low)

Table 1. Diagnostic LED codes

Advanced communication and programmability

SENSOR FIELD PROGRAMMING AND G-SERIES PC PROGRAMMING KITS

Temposonics G-Series Analog and Digital-pulse output sensors are pre-configured at the factory by model number designation. For many applications, normal sensor installation and operation does not require additional adjustment.

If however, sensor parameter changes are required in the field, MTS has developed the *'G-Series Analog PC Programming Kits', part no. 253311-1* and *part no. 253312-1 (see 'Figure 4')* which can be purchased separately to easily program the sensor.

Figure 4. G-Series PC Programming Kit, part no. 253311-1 (Analog) or 253312-1 (Digital-pulse) outputs

G-Series PC setup software is shipped with the sensor and can also be downloaded from www.mtssensors.com. You can use the PC setup software to configure, diagnose, monitor and program your G-Series sensor in the field without opening the sensor's electronics housing.

This can simplify installation and commissioning, saving valuable time. Keeping the sensor electronics isolated ensures that seal integrity and the highest product reliability are maintained.

G-Series PC Programming Kits (part no.: 253311-1 and 253312-1) include the following components:

- Wall adapter style power supply (24 Vdc output)
- USB Serial converter box with USB cable to connect to PC
- Two connection cables:
  - Cable for sensor ordered with the D60 integral connector option.
  - Cable with quick connects for sensor ordered with the integral cable option.
- G-Series PC Setup software, available for download at http://www.mtssensors.com.

Software upgrades can be downloaded free of charge from the MTS Sensors website at http://www.mtssensors.com.

G-Series PC Setup and Configuration Software Interface

VISUAL SOFTWARE INTERFACE

The G-Series PC Setup and configuration software provides a user-friendly interface *(see 'Figure 5')* along with the sensor's advanced technology enables the operator to take advantage of the following features:

- Built-in serial interfaces for robust hard-wired serial communication, (RS-422 for digital-pulse output and RS-485 for analog output).
- Remote programmability for operational modes and sensor parameters as shown below.

Analog output	Digital-pulse output
Voltage or current output mode	Start/Stop or PWM output mode
Voltage or current output range	Internal or external interrogation mode when using the PWM mode
Full adjustment for Null and Span setpoints	Number or circulations (1 to 20) when using the PWM mode

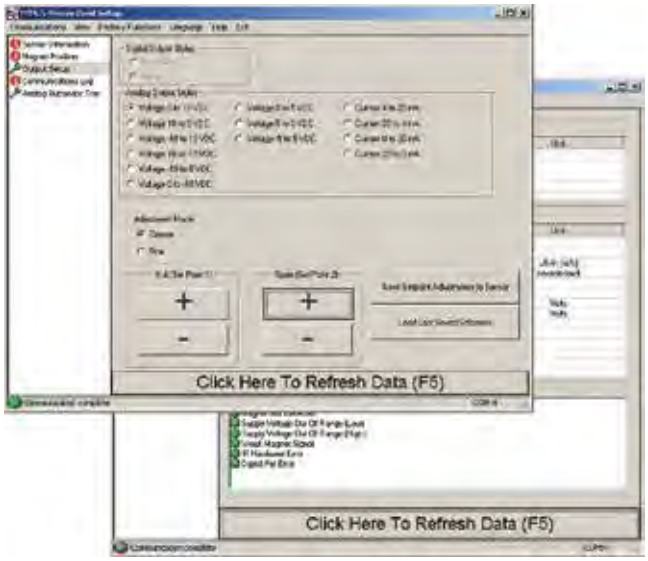

Figure 5. G-Series PC setup software interface examples

G-SERIES ANALOG HANDHELD PROGRAMMER ACCESSORY

Programming for your G-Series analog output sensor can be achieved in the field using the G-Series Analog Handheld Programmer accessory, part no. 253853 *(see 'Figure 6')*.

Figure 6. G-Series Analog Handheld Programmer (part no.: 253853). Front and back views shown.

Using the G-Series Analog Handheld Programmer the magnet positions, and corresponding output values, can be adjusted for the beginning of stroke (Setpoint 1) and for the end of stroke (Setpoint 2) that is actually needed for the specific application. These adjustments are easily done, even when the sensor is not directly accessible, by connecting the programmer to the sensor's integral cable or extension cable. Additionally, the programmer has it's own red and green LEDs to provide a remote display of the sensor's LEDs, used for indicating the sensor status and error diagnostics.

For detailed information refer to the G-Series Analog Handheld Programmer Operating Instructions (document part no. 551024) available in PDF format at www.mtssensors.com.

Model GP profile-style sensor dimension references

MODEL GP, PROFILE-STYLE SENSOR WITH STYLE S CAPTIVE-SLIDING MAGNET

Drawing is for reference only, contact applications engineering for tolerance specific information.

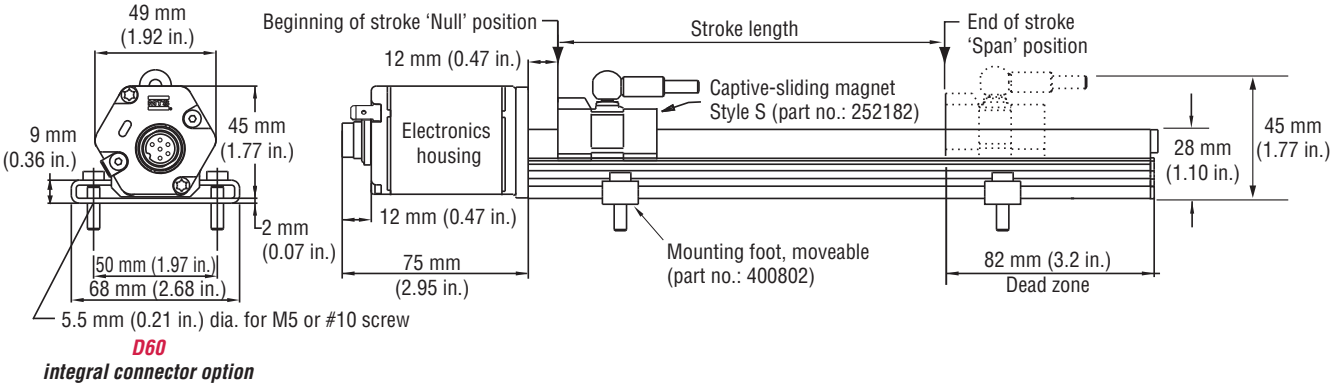

Figure 7. G-Series Model GP Profile-style sensor dimension reference (Shown with the ***D60*** integral connector option)

MODEL GP, PROFILE-STYLE SENSOR WITH STYLE V CAPTIVE-SLIDING MAGNET

Drawing is for reference only, contact applications engineering for tolerance specific information.

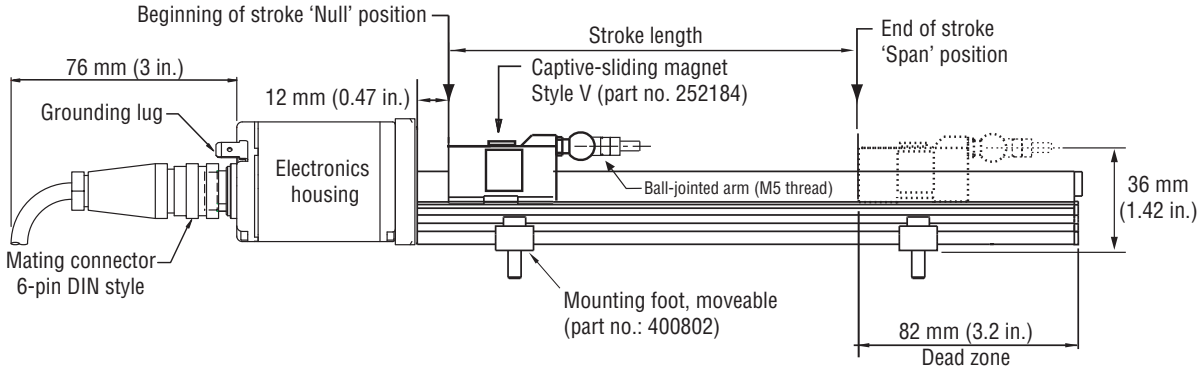

Figure 8. G-Series Model GP Profile-style sensor dimension reference (Shown with mating cable connector)

MODEL GP, PROFILE-STYLE SENSOR WITH STYLE M OPEN-RING MAGNET

Drawing is for reference only, contact applications engineering for tolerance specific information.

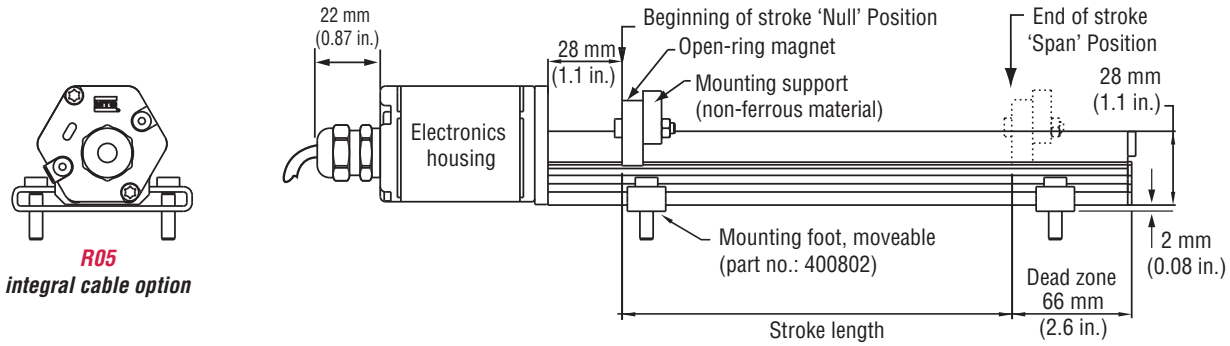

Figure 9. G-Series Model GP Profile-style sensor dimension reference (Shown with the ***R05*** integral cable option)

Standard magnet selections, mounting and installation (Model GP)

Temposonics Model GP profile-style sensors offer two basic mounting methods; side grooves for use with mounting feet or a bottom groove that accepts special T-Slot nuts. Both the mounting feet and T-Slot nuts can be positioned along the sensor extrusion to best secure the sensor for each particular application.

Refer to the Accessories section of this catalog for magnet selections and detailed mounting and installation information.

Model GH rod-style sensor dimension references

The Temposonics G-Series rod-style sensor (Model GH) offers modular construction, flexible mounting configurations, and easy installation. The Model GH sensor is designed for mounting in applications where high pressure conditions exist (5000 psi continuous, 10,000 psi spike) such as inside hydraulic cylinders. The Model GH sensor may also be mounted externally in many applications.

Stroke-dependent Dead Zones:	
Stroke length:	**Dead zone:**
50 mm (2 in.) - 5000 mm (197 in.)	63.5 mm (2.5 in.)
5005 mm (197.1 in.) - 7620 mm (300 in.)	66 mm (2.6 in.)

MODEL GH, ROD-STYLE SENSOR WITH RING MAGNET (MAGNET ORDERED SEPARATELY)

Drawing is for reference only, contact applications engineering for tolerance specific information.

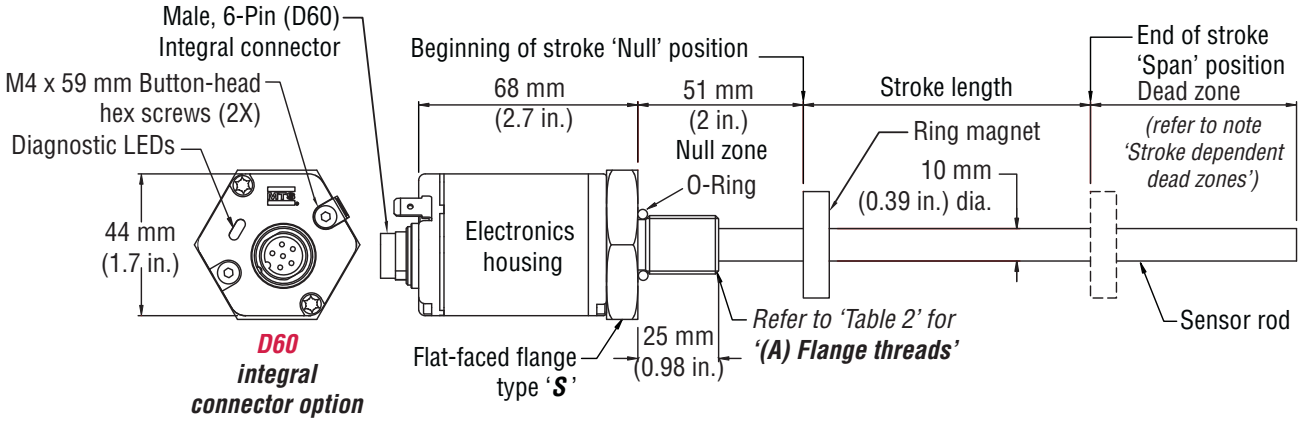

Figure 10. Model GH Rod-style sensor dimension reference (shown with ***D60*** integral connector option)

MODEL GH, ROD-STYLE SENSOR WITH 6-PIN DIN MATING CABLE CONNECTOR (MAGNET ORDERED SEPARATELY)

Drawing is for reference only, contact applications engineering for tolerance specific information.

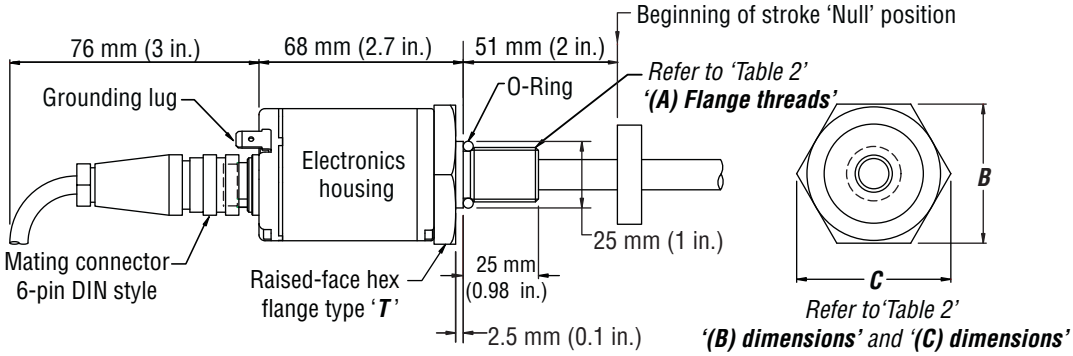

Figure 11. Model GH Rod-style sensor dimension reference (shown with mating cable connector)

Housing style Flange type	Description	(A) Flange threads	(B) Dimensions	(C) Dimensions
T	US customary threads with raised-face flange	3/4" - 16 UNF-3A	1.75 in.	2 in.
S	US customary threads with flat-faced flange	3/4" - 16 UNF-3A	1.75 in.	2 in.
M	Metric threads with flat-faced flange	M18 x 1.5	46 mm	53 mm

Table 2. Model GH Rod-style sensor housing style and flange type references

Standard magnets, mounting and installation (Model GH)

Magnets must be ordered separately with Model GH position sensors. The standard ring magnet (part number 201542-2) is suitable for most applications.

Refer to the Accessories section of this catalog for magnet selections and detailed mounting and installation information.

Models GP and GH connections and wiring

STANDARD MALE (D60) 6-PIN DIN INTEGRAL CONNECTOR (M16)

Male, 6-pin (D60) integral connector pin-out as viewed from the end of the sensor.

Important Notes:

1. A grounding lug on the end of the sensor is provided for convenient connection to earth ground.
2. Appropriate grounding of cable shield is required at the controller end.
3. For analog output sensors, the yellow wire (pin 3) and green wire (pin 4) provide serial communications. If possible, during sensor installation these wires should be placed for easy access if future programming or diagnostics are needed. When these wires are not used, they should be isolated with electrical tape to avoid unintended contact with other nearby wires or machine surfaces.

Pin Number	Wire Color	Function / Digital-pulse outputs	Function / Analog outputs
1	Gray	(-) Gate for PWM (-) Stop for Start/Stop or programming (RS-422 TX-)	0 to 10, -10 to +10 Vdc or 4 to 20 mA, 0 to 20 mA or reverse acting: 10 to 0, 10 to -10 Vdc or 20 to 4 mA, 20 to 0 mA
2	Pink	(+) Gate for PWM (+) Stop for Start/Stop or programming (RS-422 TX+)	Return for pin 1
3	Yellow	(+) Interrogation for PWM (+) Start for Start/Stop or Programming (RS-422 RX+)	Programming (RS-485+)
4	Green	(-) Interrogation for PWM (-) Start for Start/Stop or Programming (RS-422 RX-)	Programming (RS-485-)
5	Red or Brown	Supply voltage (+Vdc)	Supply voltage (+Vdc)
6	White	DC ground (for supply)	DC ground (for supply)

Table 2. Wiring, Male, 6-pin (D60) integral connector

Retrofit/replacement references - integral adapter cables with in-line connectors

Tables 4 and 5 describe a variety of retrofit connection options for analog and digital-pulse sensors to provide direct backward compatibility for your application.

ANALOG OUTPUT

Important Notes (Table 4):

1. This format used to show the voltage and current output range is: [Value at Null (Setpoint 1] to [Value at Span (setpoint 2)]. Not all of the available output ranges for voltage are shown.
2. When replacing a L-Series sensor with a G-Series sensor, and reverse-acting output is being used, the wire connections must be changed at the controller. Refer to the *G-Series Cross Reference, document part no.: 550967* for detailed information.
3. If possible, during sensor installation, these wires should be placed for easy access if future programming or diagnostics are needed. When these wires are not used, they should be isolated with electrical tape to avoid unintended contact with other nearby wires or machine surfaces.

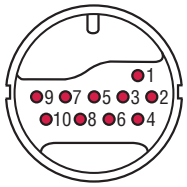

Male, 10-pin In-line RB connector *(Option RB_)*

Male, 10-pin in-line or integral MS connector *(Option FM_ or MS0)*

DIGITAL-PULSE (START/STOP OR PWM) OUTPUTS

Important Notes (Table 5):

The G-Series sensor can provide a square wave neuter output for backwards compatibility to replace Temposonics I, Temposonics II, and L-Series sensors that produced a neuter output signal. The neuter output option was used for connection to the Analog Output module (AOM), Digital Interface Box (DIB), and to some custom interface/controllers. Reference the G-Series Cross Reference, document part no. 550967, for neuter output connection information, including adapter cables and field-installed connections.

‡ When using PWM output with internal interrogation, both interrogation input signals are not used. Therefore, the designated connector pin(s) can be left unconnected or connected to ground.

Analog output connections (voltage or current)

In-line RB connector *(Option RB_)* Pin number	in-line MS connector *(Option FM_)* Pin number	integral MS connector *(Option MS0)* Pin number	Function / Analog output (see Note 1)
4	D	D	0 to 10, -10 to +10 Vdc or 4 to 20 mA, 0 to 20 mA or reverse acting (see Note 2): 10 to 0, +10 to -10 Vdc or 20 to 4 mA, 20 to 0 mA
3	C	C	Ground for Signal Return
7	G	G	Programming (RS-485+) (See Note 3)
8	H	H	Programming (RS-485-) (See Note 3)
5	E	E	Supply voltage (+Vdc)
1	A	A	DC ground (for supply)
2	B	B	No connection
6	F	F	No connection
9	J	J	No connection
10	K	K	No connection

Table 4. Intergal adapter cable connections (analog output)

Digital-pulse output connections (Start/Stop or PWM)

In-line RB connector *(Option RB_)* Pin Number	in-line MS connector *(Option FM_)* Pin number	Integral MS connector *(Option MS0)* Pin number	Function / Digital-pulse output
3	C	C	(-) Gate for PWM (-) Stop for Start/Stop or programming (RS-422 TX-)
4 and 8	D	D	(+) Gate for PWM (+) Stop for Start/Stop or programming (RS-422 TX+)
9	G	G	(+) Interrogation for PWM ‡ (+) Start for Start/Stop or Programming (RS-422 RX+)
10	H	H	(-) Interrogation for PWM ‡ (-) Start for Start/Stop or Programming (RS-422 RX-)
5	E	E	Supply voltage (+Vdc)
1	A	A	DC ground (for supply)
2	B	B	No connection
6	F	F	No connection
7	J	J	No connection
-	K	K	No connection

Table 5. Intergal adapter cable connections (analog output)

Models GP and GH Sensors
Ordering Information

G														
1	2	3	4	5	6	7	8	9	10	11	12	13	14	15

SENSOR MODEL = G 1-2

GP = Profile style
GH = Hydraulic rod style

HOUSING STYLE = 3

Model GP profile-style sensor (includes one magnet):

S = Captive-sliding magnet with ball joint at top (part no. 252182)
V = Captive-sliding magnet with ball joint at front (part no. 252184)
M = Open-ring magnet (part no. 251416-2)

Model GH rod-style sensor (magnet(s) must be ordered separately):

T = US customary threads, raised-faced flange and pressure tube, standard
U = Same as option "T", except uses fluoroelastomer seals for the electronics housing
B = Sensor cartridge only (no flange and pressure tube, stroke length < 1830 mm (72 in.))
S = US customary threads, flat-faced flange and pressure tube, standard
H = Same as option "S", except uses fluoroelastomer seals for the electronics housing
M = Metric threads, flat-faced flange and pressure tube, standard
V = Same as option "M", except uses fluoroelastomer seals for the electronics housing

STROKE LENGTH = 4-8

_ _ _ _ **M** = Millimeters
(Encode in 5 mm increments)

_ _ _ . _ **U** = Inches and tenths
(Encode in 0.1 in. increments)

Stroke Length Notes:

1. Rod-style sensor (model GH) Voltage or Current = 50 mm (2 in.) - 2540 mm (100 in.) *(See 'Note 6' on page 16).*
2. Rod-style sensor (model GH) Digital-pulse = 50 mm (2 in.) - 7620 mm (300 in.)
3. Profile-style sensor (model GP) Voltage or Current = 50 mm (2 in.) - 2540 mm (100 in.) *(See 'Note 6' on page 16).*
4. Profile-style sensor (model GP) Digital-pulse = 50 mm (2 in.) - 5080 mm (200 in.)

CONNECTION TYPE = 9-11

Integral connector:

D60 = 6-pin DIN (M16), male, standard
MS0 = 10-pin MS Style male

Integral cables:

R _ _ = Integral cable, PVC jacket, pigtail termination
F _ _ = Integral cable, black polyurethane jacket with pigtail termination *(See 'Note 1' on page 16)*

Cable length:
Encode in feet if using US customary stroke length
Encode in meters if using metric stroke length

_ _ = 3 (**03**) to 98 (**98**) ft. *or* 1 (**01**) to 30 (**30**) meters.

Cable Length Note:

MTS recommends the maximum integral cable length to be 10 meters (33 ft.). Cables greater than 10 m (33 ft.) in length are available, however, proper care must be taken during handling and installation.

RB1 = 1 ft. inetgral cable, PVC jacket, with male in-line RB connector †
FM1 = 1 ft. inetgral cable, PUR jacket, with male in-line 10-pin MS connector ‡
FD1 = 1 ft. inetgral cable, PUR jacket, with male in-line 6-pin DIN (M16) connector

RB2 = 5 ft. inetgral cable, PVC jacket, with male in-line RB connector †
FM2 = 5 ft. inetgral cable, PUR jacket, with male in-line 10-pin MS connector ‡
FD2 = 5 ft. inetgral cable, PUR jacket, with male in-line 6-pin DIN (M16) connector

† *See 'Note 2' on page 101.*
‡ *See 'Note 3' on page 101.*

INPUT VOLTAGE = 12

1 = +24 Vdc (+20% - 15%) standard
2 = +9 Vdc to +28.8 Vdc *(See 'Note 4' on page 16)*
A = Same as option '**1**' except includes the High Vibration-Resistant (HVR) option for Model GH only, stroke range = 50 mm (2 in.) to 2000 mm (78.7 in.), Refer to *'HVR Option' (See 'Note 8' on page 101).*
B = Same as option '**2**' except includes the High Vibration-Resistant (HVR) option for Model GH only, stroke range = 50 mm (2 in.) - 2000 mm (78.7 in.), Refer to *'HVR Option. (See 'Note 8' on page 101)*

OUTPUT *(13 - 15)* = 13-15

2 to 3 digit code defined by the output option selected. Output options continued on next page.

G-Series Analog/Digital

G														
1	2	3	4	5	6	7	8	9	10	11	12	13	14	15

Choose output option from below (2 to 3 digit code) = [ ][ ][ ] **13 - 15**

Choose a value described below to encode in 2 to 3 digits (sensor part number boxes 13-15)

Voltage

V0	= 0 to +10 Vdc	**V4**	= 0 to +5 Vdc	**V8**	= -5 to +5 Vdc
V1	= +10 to 0 Vdc	**V5**	= +5 to -5 Vdc	**V9**	= +5 to 0 Vdc
V2	= -10 to +10 Vdc	**V6**	= -10 to 0 Vdc		
V3	= +10 to -10 Vdc	**V7**	= 0 to -10 Vdc		

Current

A0	= 4 to 20 mA	**A2**	= 0 to 20 mA
A1	= 20 to 4 mA	**A3**	= 20 to 0 mA

Digital pulse

R0 X = Start/Stop. If more than one magnet, the X denotes the number of magnets in hexadecimal (2 to F).
RF X = Start/Stop with Closed-Error Signal Utility (*see 'Note 7'*). If more than one magnet, the X denotes the number of magnets in hexadecimal (2 to F).
DI X = PWM, internal interrogation, the X denotes the number of circulations in hexadecimal (1 to F), and G = 16, K = 20 circulations.
FI X = PWM, internal interrogation with Closed Error Signal Utility *(see 'Note 7')*.The X denotes the number of circulations in hexadecimal (1 to F), and G = 16, K = 20 circulations.
DE X = PWM, external interrogation, the X denotes the number of circulations in hexadecimal (1 to F), and G = 16, K = 20 circulations.
FE X = PWM, external interrogation with Closed Error Signal Utility *(see 'Note 7')*.The X denotes the number of circulations in hexadecimal (1 to F), and G = 16, K = 20 circulations.
N0 X = Start/Stop output wired for square wave neuter ("+ Stop" used for neuter output pulse). If more than one magnet, the X denotes the number of magnets in hexadecimal (2 to F) (*see 'Note 5'*).

Notes:

1. Polyurethane jacketed cable for use where higher resistance to moisture, oil, and other environmental conditions are required.
2. Wired for analog, digital-pulse, or neuter, depending on output selected. For Temposonics II and model LH replacements/ retrofits only. Refer to G-Series Cross Reference part numbers 550967 and 550956 for more information.
3. Wired for analog and digital-pulse depending on output selected. Use for model LH replacements or retrofits. Refer to the G-Series Cross Reference document, part number 550956 for more information.
4. Selected when retrofitting sensors with ± 15 Vdc input voltages.
5. For Temposonics I, Temposonics II, and model LH neutered output sensor retrofits only. Refer to the G-Series Cross Reference documents, part numbers 550956 and 550967 for more information.
6. Stroke lengths longer than 2540 mm (100 in.) for analog outputs are available on a custom basis.
7. When shock and vibration events exceed the sensor specification rating, the Closed Error Signal Utility (option "F") will provide either PWM or Start/ Stop outputs, which are backwards compatible to interface cards/controllers designed for the legacy Temposonics II and L-Series sensor models. For more information about the Closed Error Signal Utility (option "F"), refer to Application Note, part number 550983.
8. The High Vibration-Resistant (HVR) option provides the model GH rod-style sensors with increased resistance to shock and vibration for use in heavy duty machinery. Refer to "G-Series and R-Series Sensors for High Shock and Vibration Applications", part no. 551073 for more information.

Reference table

Decimal:	1	2	3	4	5	6	7			
Ordering Code:	1	2	3	4	5	6	7			
Decimal:	8	9	10	11	12	13	14	15	16	20
Ordering Code:	8	9	A	B	C	D	E	F	G	K

Temposonics®

Magnetostrictive, Absolute, Non-contact
Linear-Position Sensors

G-Series Redundant Models GT2 and GT3

Analog (Voltage/Current)

Data Sheet

Document Part Number
551102 Revision B

Model GT3 rod-style redundant position sensor

FEATURES

- Offers Redundancy for Enhanced Safety Applications
- Linear, Absolute Measurement
- Contains Up to Three Separate, Independent Measuring Systems in a Single Compact Housing
- Non-Contact Sensing Technology
- Superior Accuracy, Linearity Deviation Less Than 0.02%
- Repeatability Within 0.001%
- Fully Adjustable Analog Outputs (Voltage or Current) Within: -10 to +10 Vdc or 0 to 20 mA

BENEFITS

- Rugged Industrial Sensor
- Compact Design with a Standard Size 10 mm (0.39 in.) O.D. Stainless-Steel Rod
- Uses Standard Mounting

APPLICATIONS

- Ideal for High-Safety Applications Requiring Redundancy
- Continuous Operation In Harsh Industrial Conditions
- High Pressure Conditions

TYPICAL INDUSTRIES

- Power Plants
- Water and Wind Turbine Pitch Settings
- Marine Propellers
- Ship Control Systems
- Floodgate Control

ISO 9001 CERTIFIED

G-Series GT Redundant

Product overview

G-Series model GT sensors are extremely robust and are ideal for continuous operation under harsh industrial conditions. The rod housing is capable of withstanding high pressures such as those found in hydraulic cylinders. G-Series redundant sensors provide accurate, linear-position measurement for applications that benefit from redundancy due to safety relevant functions.

G-Series Redundant sensors feature two or three independent measuring systems contained in one compact housing. Each measuring system contains its own channel with sensor element, power and evaluation electronics and output signal. Each channel has it's own output connector or cable.

All sensor elements are integrated in one pressure proofed, high-grade steel rod. Rod and housing style feature the approved standard dimensions with 10 mm (0.39 in.) diameter rod and 3/4-16 UNF or M18 x 1.5 threaded hex flanges. The redundant sensor easily installs in applications measuring linear movements of control valves, linear drives, fluid cylinders and machines.

Product specifications

Parameters	Specifications
OUTPUT	
Measured output variables:	Position
Resolution:	**Analog:** Infinite (restricted by output ripple)
Update times:	< 1 ms (typical)
Linearity deviation:	< ± 0.02% full stroke (minimum ± 50 µm)
Repeatability:	< ± 0.001% of full stroke (minimum ± 2.5 µm)
Hysteresis:	< 4 µm
Analog Outputs:	**Model GT2:** 2 output channels **Model GT3:** 3 output channels **Voltages (Fully adjustable):** 0 to 10, 10 to 0, -10 to +10, +10 to -10 Vdc (minimum controller load >5k ohms) **Current (Fully Adjustable):** 4 (0) to 20 mA, 20 to 4 (0) mA (min./max. load 0/500 ohms)
Stroke Length:	**GT2/GT3:** **Analog:** 50 mm (2 in.) to 2900 mm (114 in.)
ELECTRONICS	
Operating voltage:	**+24 Vdc nominal:** -15 or +20% **Polarity protection:** up to -30 Vdc **Overvoltage protection:** up to 36 Vdc **Current drain:** 100 mA typical per channel **Dielectric withstand voltage:** 500 Vdc (DC ground to machine ground)
Setpoints:	**Setpoint adjustment (Null/Span):** 100% of electrical stroke length, 50 mm (2 in.) minimum distance between setpoints.

Parameters	Specifications
ENVIRONMENTAL	
Operating conditions:	**Operating temperature:** -40 °C (-40 °F) to +75 °C (167 °F) **Relative humidity:** 90% no condensation
EMC test:	**Emissions:** IEC/EN 61000-6-3 **Immunity:** IEC/EN 61000-6-2 IEC/EN 61000-4-2/3/4/5/6/8, level 3/4 criterium A, CE qualified
Shock rating:	100 g (single hit)/ IEC standard 68-2-27 (survivability)
Vibration rating:	5 g /10 to 2000 Hz, IEC standard 68-2-6 (operational)
WIRING	
Connection type:	6-pin male D60 (M16) connector or integral cable
ROD STYLE SENSOR (MODEL GT2/GT3)	
Electronic head:	Aluminum housing
Sealing:	IP 67
Sensor rod:	304L stainless steel
Operating pressure:	350 bar static, 690 bar peak (5000 psi static, 10,000 psi peak)
Mounting:	Any orientation. Threaded flange M18 x 1.5 or 3/4 - 16 UNF-3A
Typical mounting torque:	45 N-m (33 ft. - lbs.)
Magnet types:	Ring magnet, open-ring magnet, or magnet float

Output options

G-Series rod-style redundant sensors are available with analog (voltage and current) outputs. The G-Series redundant, model GT2 sensor provides two output channels, and model GT3 provides three output channels.

ANALOG (VOLTAGE/CURRENT)

G-Series analog sensors provide direct signals, including voltage (0 to 10 Vdc or -10 to +10 Vdc, foward or reverse acting) and current (4 to 20 mA, or 0 to 20 mA, forward or reverse acting). *(see 'Figure 1')*. Both voltage and current outputs allow full adjustments of null and span setpoints (minimum 2 in. between setpoints). Since the outputs are direct, no signal-conditioning electronics are needed when interfacing with controllers or meters.

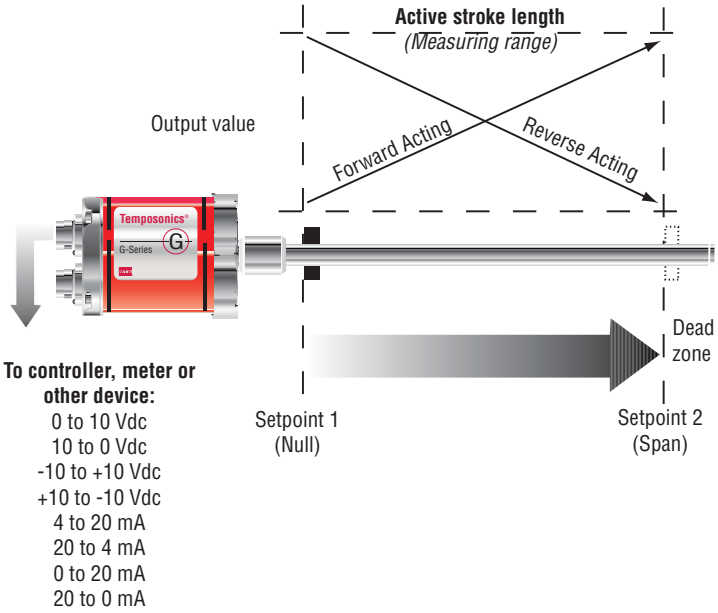

Figure 1. Single magnet analog output diagram

Advanced communications and programmability

SENSOR FIELD PROGRAMMING AND G-SERIES PC PROGRAMMING KIT

Temposonics G-Series Redundant sensors are preconfigured at the factory by model code designation. For many applications no adjustments are required for normal sensor installation and operation. If, however, sensor parameter changes are desired while in the field, the G-Series Redundant sensor is easily programmed by using the G-Series PC Programming kit *(see 'Figure 2')*.

Figure 2. G-Series PC Programming Kit, part no. 253311-1

G-Series PC setup software is shipped with the sensor and can also be downloaded from www.mtssensors.com. You can use the PC setup software to configure, diagnose, monitor and program your G-Series sensor in the field without opening the sensor's electronics housing.

This can simplify installation and commissioning, saving valuable time. Keeping the sensor electronics isolated ensures that seal integrity and the highest product reliability are maintained.

G-Series Analog PC Programming Kit (part no.: 253311-1)includes the following components:

- Wall adapter style power supply (24 Vdc output)
- USB Serial converter box with USB cable to connect to PC
- Two conection cables:
  - Cable for sensor ordered with the D60 integral connector option.
  - Cable with quick connects for sensor ordered with the integral cable option.
- G-Series Analog PC Setup software, available for download at http://www.mtssensors.com

G-Series PC Setup and Configuration Software Interface

VISUAL SOFTWARE INTERFACE

The G-Series PC Setup and configuration software provides a user-friendly interface *(see 'Figure 3')* along with the sensor's advanced technology enables the operator to take advantage of the following features:

- Built-in serial interfaces for robust hard-wired serial communication (RS-485).
- Remote programmability for operational modes and sensor parameters *(see 'Table 1)*.

G-Series PC Setup and Configuration Software Interface (Cont.)

ANALOG (VOLTAGE/CURRENT) OUTPUT FEATURES
Voltage or current output mode
Voltage or current output range
Full adjustment for Null and Span setpoints

Table 1. Remote programmability and operational modes

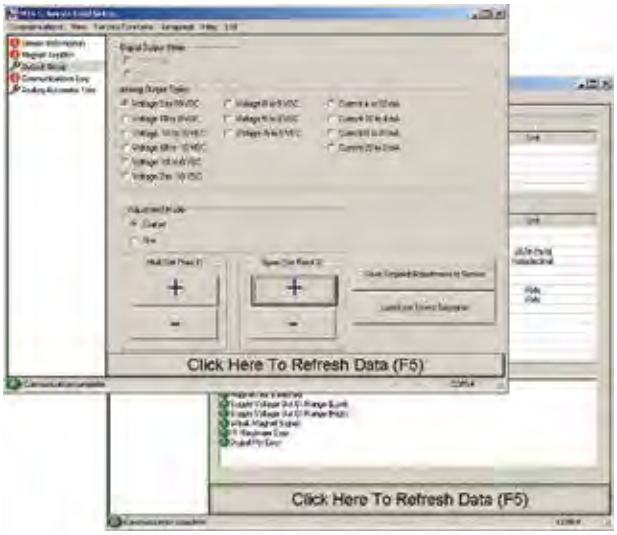

Figure 3. G-Series PC setup software interface examples

G-SERIES HANDHELD PROGRAMMER ACCESSORY FOR ANALOG OUTPUT

Programming for your G-Series analog output sensor can be achieved in the field using the G-Series Analog Handheld programmer accessory, part no. 253853 *(see 'Figure 4')*.

Figure 4. G-Series Analog Handheld Programmer (part no.: 253853). Front and back views shown.

Using the G-Series Analog Handheld Programmer, magnet positions and corresponding output values can be adjusted for the beginning of stroke (Setpoint 1) and for the end of stroke (Setpoint 2) that is actually needed for the specific application. These adjustments are easily done, even when the sensor is not directly accessible, by connecting the programmer to the sensor's integral cable or extension cable. Additionally, the programmer has it's own red and green LEDs to provide a remote display of the sensor's status and error diagnostics. For detailed information refer to the G-Series Analog Handheld Programmer Operating Instructions *(document part no.: 551024)* available at http://www.mtssensors.com.

Model GT2 rod-style sensor dimension references

Note:

When mounting the sensor, use a basic wrench *(see 'Figure 5')* with a maximum 8 mm (0.31 in.) thickness to ensure tightening torque is only applied to the hex flange and not to the electronics housing.

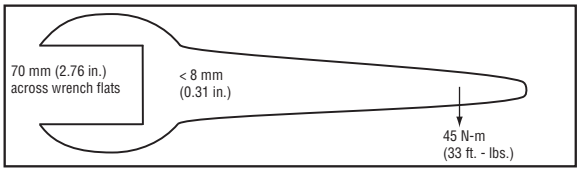

Figure 5. Basic wrench

Temposonics G-Series rod-style sensors (Models GT2/GT3) offer modular construction, flexible mounting configurations, and easy installation. Models GT2/GT3 sensors are designed for mounting in applications where high pressure conditions exist (5000 psi continuous, 10,000 psi spike), such as inside hydraulic cylinders *(see 'Figure 8')*. Both GT2 and GT3 sensor models can also be mounted externally in many applications.

MODEL GT3 ROD-STYLE SENSOR WITH RING MAGNET (MAGNET ORDERED SEPARATELY)

Drawing is for reference only, contact applications engineering for tolerance specific information.

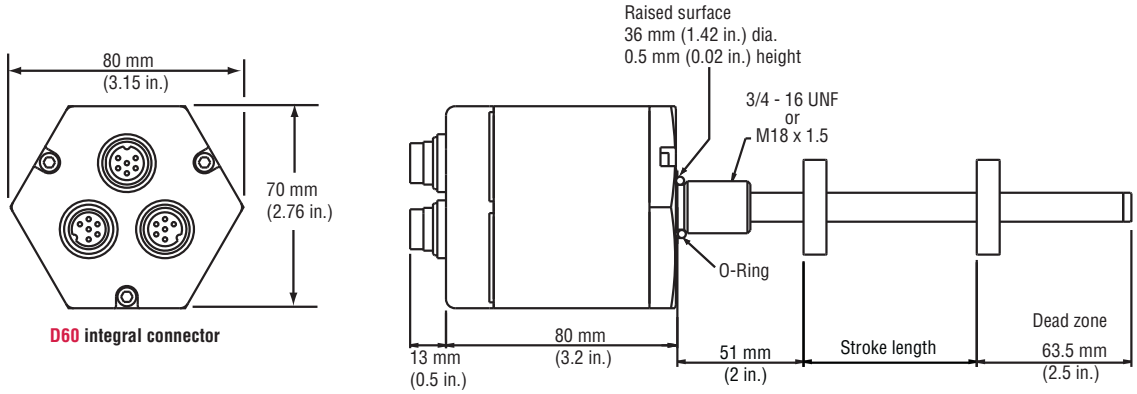

Figure 6. Models GT3 Rod-style sensor dimension reference (shown with ***D60*** integral connection type)

Model GT3 rod-style sensor dimension references

MODEL GT3 ROD-STYLE SENSOR WITH INTEGRAL CABLE (MAGNET ORDERED SEPARATELY)

Drawing is for reference only, contact applications engineering for tolerance specific information.

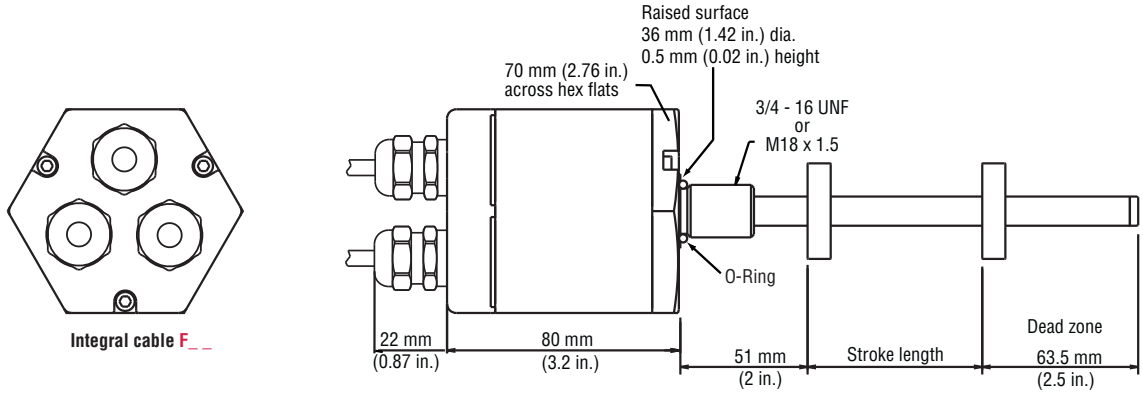

Figure 7. Model GT3 Rod-style sensor dimension reference (shown with integral cable)

Standard magnets, mounting and installation (Model GT2 and GT3)

Magnets must be ordered separately with Model GT2 and GT3 position sensors. The standard ring magnet (part number 201542-2) is suitable for most applications.

Refer to the Accessories section of this catalog for magnet selections and detailed mounting and installation information.

Models GT2/GT3 connections and wiring

STANDARD MALE (D60) 6-PIN DIN INTEGRAL CONNECTOR (M16)

Male, 6-pin (D60) integral connector pin-out as viewed from the end of the sensor.

Important Notes:

1. A grounding lug on the end of the sensor is provided for convenient connection to earth ground.
2. Appropriate grounding of cable shield is required at the controller end.
3. For analog output sensors, the yellow wire (pin 3) and green wire (pin 4) provide serial communications. If possible, during sensor installation these wires should be placed for easy access if future programming or diagnostics are needed. When these wires are not used, they should be isolated with electrical tape to avoid unintended contact with other nearby wires or machine surfaces.

Pin Number	Wire Color	Function / Analog output
1	Gray	0 to 10, -10 to +10, or 4 to 20 mA, 0 to 20 mA or reverse acting: 10 to 0, 10 to -10 Vdc or 20 to 4 mA, 20 to 0 mA
2	Pink	Return for pin 1
3	Yellow	Programming (RS-485+)
4	Green	Programming (RS-485-)
5	Red or Brown	Supply voltage (+Vdc)
6	White	DC ground (for supply)

Models GT2 and GT3 Sensors
Ordering Information

G														
1	2	3	4	5	6	7	8	9	10	11	12	13	14	15

SENSOR MODEL = G T _ **1-3**

GT2 = Double-redundant rod-style sensor

GT3 = Triple-redundant rod-style sensor

HOUSING STYLE = _ **4**

Model GT rod-style sensor (magnet(s) must be ordered separately):

S = US customary threads and pressure tube, standard

M = Metric threads and pressure tube, standard

STROKE LENGTH = _ _ _ _ _ **5-9**

_ _ _ _ **M** = Millimeters
(Encode in 5 mm increments)

_ _ _ . _ **U** = Inches and tenths
(Encode in 0.1 in. increments)

Stroke Length Note:

Rod-style sensor (model GT) stroke range = 50 mm (2 in.) - 2900 mm (114 in.)

CONNECTION TYPE = _ _ _ **10-12**

Integral connector:

D60 = 6-pin DIN (M16), male, standard (2X or 3X)

Integral cables:

F _ _ = Integral cable, black polyurethane jacket with pigtail termination (2X or 3X)

Cable length:
Encode in feet if using US customary stroke length
Encode in meters if using metric stroke length

_ _ = 3 (**03**) to 98 (**98**) ft. *or* 1 (**01**) to 30 (**30**) meters.

Cable Length Note:

MTS recommends the maximum integral cable length to be 10 meters (33 ft.). Cables greater than 10 m (33 ft.) in length are available, however, proper care must be taken during handling and installation.

INPUT VOLTAGE = _ **13**

1 = +24 Vdc (+20% - 15%)

OUTPUT = _ _ **14-15**

V0	=	0 to +10 Vdc	**A0**	=	4 to 20 mA
V1	=	+10 to 0 Vdc	**A1**	=	20 to 4 mA
V2	=	-10 to +10 Vdc	**A2**	=	0 to 20 mA
V3	=	+10 to -10 Vdc	**A3**	=	20 to 0 mA

Note:

Standard factory settings configure all outputs to be the same per the output option selected (when configuring the model number). If needed, an output can be individually reprogrammed in the field to best fit the application.

Temposonics®

Magnetostrictive, Absolute, Non-contact
Linear-Position Sensors

E-Series Model EH

Analog/Digital-Pulse (Start/Stop) Outputs

Data Sheet

MTS SENSORS

Document Part Number:
551250 Revision C

Model EH rod-style position sensor
Stroke Length: 50 mm to 2500 mm (2 in. to 100 in.)

FEATURES

- Linear, Absolute Measurement
- Non-Contact Sensing Technology
- Linearity Deviation Less Than 0.02% F.S.
- Repeatability Within 0.005% F.S.
- Two Outputs Available:
  - Analog (Voltage/Current) Forward or Reverse Acting
  - Start/Stop Output
- Simple Sensor Parameter Upload (for Start/Stop)
- Stroke Length Range: 50 mm to 2500 mm (or 2 in. to 100 in.)
- Hermetically-Sealed Stainless Steel For IP69K Ingress Protection
- EMI Shielded and CE Certified
- Also with Stainless Steel 1.4404 / AISI 316L available

BENEFITS

- Compact Stainless Steel Position Sensor, Designed For Use In Hydraulic Cylinders
  - Standard 10 mm dia. Sensor Rod For Typical Applications
  - Optional 7 mm dia. Sensor Rod For Use In Small Bore Cylinders
- Simultaneous Multi-position Measurements
- Over Voltage Protection to 36 Vdc and Polarity Protection up to -30 Vdc

APPLICATIONS

- Clevis Mounted or Space Limited Cylinder Applications
- Harsh Industrial Conditions
- High-Pressure Washdown
- Gates and Valve Control

TYPICAL INDUSTRIES

- Fluid Power
- Factory Automation
- Steel Mills
- Material Handling and Packaging
- Water Management

Product overview

MTS Sensors continues to establish new performance standards for low-cost, fully-industrial, durable position sensors using the widely preferred magnetostrictive technology. This principle for accurate and non-contact measurement of linear-position sensing was developed 30 years ago by MTS and is used with outstanding success in a large variety of industrial applications. The Temposonics model EH sensor provides as much performance as you need for your application - you benefit from the advantages of magnetostrictive position measurement at optimum costs.

The Temposonics® Model EH sensor features a pressure resistant sensor rod for direct stroke measurement inside hydraulic cylinders. With its minimized sensor head and either a 7 mm or 10 mm rod, it is the ideal solution when space is critical. For long strokes, the model EH is available with measuring ranges up to 2500 mm (or 100 in.).

The model EH sensor offers completely sealed stainless-steel housing for long life position measurement for rugged environments. When installed with the appropriate mating connector and cable, it features protection up to IP69K and is suitable for high-pressure washdown applications.

Product specifications

Parameters	Specifications
OUTPUT	
Measured output variable:	Position
Resolution:	**Analog:** Infinite (restricted by output ripple) **Start/Stop:** 0.1, 0.01 and 0.005 mm (controller dependent)
Linearity deviation:	< ± 0.02% full stroke (minimum ± 60 µm)
Repeatability:	< ± 0.005% full stroke (minimum ± 20 µm)
Outputs:	**Analog (voltage or current)** **Voltage:** 0 to 10 Vdc or 10 to 0 Vdc or Two outputs**:** 0 to 10 Vdc and/or 10 to 0 Vdc (controller input resistance RL ≥ 5k Ohm) **Current:** 4 to 20 mA or 20 to 4 mA or Two outputs: 4 to 20 mA or 20 to 4 mA (controller input resistance RL ≤ 500 Ohm) **Digital-pulse (Start/Stop):** RS-422 differential signal Serial parameter upload available for: Measuring range, offset, gradient, status and manufacturer number
Stroke length:	**Range:** 50 mm to 2500 mm (or 2 to 100 in.)
ELECTRONICS	
Operating voltage:	**+24 Vdc nominal:** -15% or +20%***** **Polarity protection:** up to -30 Vdc **Over voltage protection:** up to 36 Vdc **Current drain:** *Analog:* 50 to 140 mA *Start/Stop:* 50 to 100 mA *(Stroke length dependent)* **Dielectric withstand voltage:** 500 Vdc (DC ground to machine ground)

* UL Recognition requires an approved power supply with energy limitation (UL 61010-1), or Class 2 rating according to the National Electrical Code (USA) / Canadian Electrical Code.

** The IP rating is not part of the UL Recognition.

Parameters	Specifications
ENVIRONMENTAL	
Operating conditions:	**Operating temperature:** -40 °C (-40 °F) to 75 °C (167 °F) **Relative humidity:** 90% no condensation **Ingress protection:** IP69K****** *(when appropriate mating connector is correctly fitted)*
EMC test:	**Electromagnetic emission:** EN 61000-6-4 **Electromagnetic susceptibility:** EN 61000-6-2 The sensor meets the requirements of the EC directives and is marked with CE.
Shock rating:	100 g (single hit)/ IEC standard EN 60068-2-27
Vibration rating:	15 g/10 to 2000 Hz, IEC standard EN 60068-2-6 (resonance frequencies excluded)
WIRING	
Connection types:	**Analog output:** 5-pin (M12) male integral connector **Start/Stop output:** 8-pin (M12) male integral connector
ROD-STYLE SENSOR (MODEL EH)	
Sensor housing:	Stainless Steel 1.4305 / AISI 303; Stainless Steel 1.4404 / AISI 316L
Sensor rod:	Stainless Steel 1.4301 / AISI 304; Stainless Steel 1.4404 / AISI 316L for 10 mm diameter rod only
Operating pressure:	**7 mm Rod:** 300 bar static, 350 bar peak (4350 psi static, 5076 psi peak) **10 mm Rod:** 350 bar static, 450 bar peak (5000 psi static, 6526 psi peak)
Mounting:	Any orientation. Threaded flange M18 x 1.5 or 3/4 - 16 UNF-3A
Typical mounting torque:	45 N-m (33 ft. - lbs.)
Magnet types:	Ring magnet, open-ring magnet or magnet float

Outputs

Analog (voltage/current) outputs

Analog outputs include voltage (0 to 10 Vdc forward or reverse acting), and current (4 to 20 mA forward or reverse acting). Since the outputs are direct, no signal conditioning electronics are needed when interfacing with controllers or meters *(see 'Figure 1')*.

Analog output ranges:

- 0 to 10 Vdc
- 10 to 0 Vdc
- 0 to 10 Vdc and 10 to 0 Vdc
- 4 to 20 mA
- 20 to 4 mA

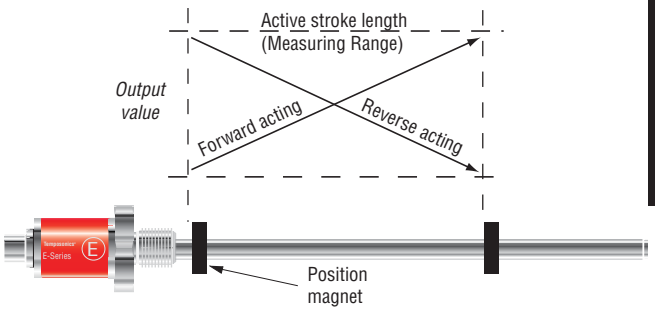

DIGITAL (START/STOP) OUTPUTS

The Temposonics E-Series Model EH Start/Stop output sensor requires a start signal from a controller or interface module to initiate the measurement cycle. The sensor generates a stop signal at the end of the measurement cycle that is used to stop the controller's counter clock.

The elapsed time between the Start and Stop signals is directly proportional to the magnet's position along the active stroke length. The controller can calculate the absolute position of the magnet from the time value and the sensor's unique gradient value (inverse of the speed for the sonic pulse traveling in the sensor's waveguide). *(see 'Figure 2')*.

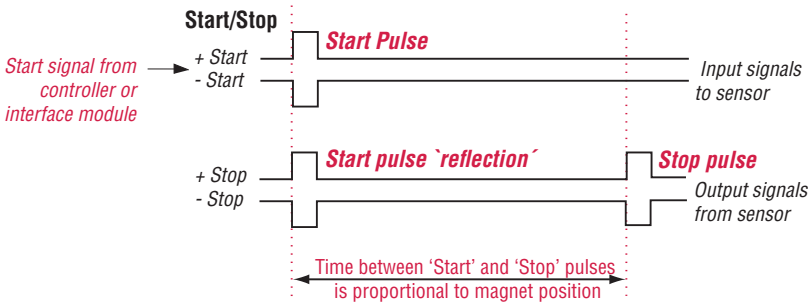

Dual magnet outputs

MEASUREMENT OPTIONS

E-Series sensors provide options for simultaneous multi-position measurements by using more than one magnet per sensor. When using Start/Stop sensor output the ability to process multiple magnets depends on the capability of the controller or interface module that is used. When using analog type outputs (voltage or current) the sensor is limited to a maximum of two magnets.

For analog output types the options for single-magnet or dual-magnets is specified in the sensor model number when ordered. For single-magnet sensors the sensor's full active stroke length is utilized by the one magnet. For example when using forward-acting outputs, the output is 0% of its value when the magnet is at the null position (start of stroke) and 100% of its value when at the edge of the dead zone (end of stroke), *(see 'Figure 3')*.

However, for dual-magnet sensors the sensor's active stroke length must be shared by the two magnets, and a separation > or = to 75 mm (3 in.) must be maintained between the two magnets (front side of the first magnet to front side of the second magnet). This minimum distance between magnets is needed to maintain proper sensor output. Therefore, for the second magnet the start of stroke (0% output) is set at 75 mm away from the sensor's null position. Likewise, for the first magnet the end of stroke (100% output) is now set 75 mm away from the edge of the dead zone *(see 'Figure 3')*.

The result of using the dual-magnet E-Series options is that the stroke length available for each magnet is 75 mm less (or 3 inches less when specifying stroke length in inches) than the sensor's full active stroke length as indicated in the model number.

When ordering the single-magnet E-Series sensor the minimum stroke length available is 50 mm or 2 inches. However when ordering dual magnet E-Series sensors the minimum stroke length available is 125 mm (i.e. 50 mm minimum, plus 75 mm for the minimum distance between magnets). Likewise, when specifying stroke length in inches the minimum stroke length available is 5 inches (i.e. 2 inch minimum, plus 3 inches for the minimum distance between magnets).

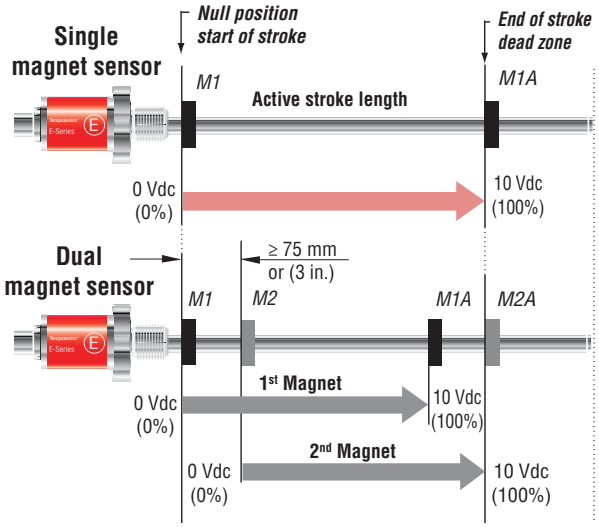

Communication

SENSOR PARAMETER UPLOAD FEATURE

For applications using smart sensor interfaces, the Model EH sensor with Start/Stop output *(Option **R3**)* comes with the ability to perform sensor parameter uploads. This feature replaces the task of entering sensor data manually, saving time and preventing possible entry errors during start-up or for system maintenance.

Note: Start/Stop output (option R3)

When the sensor parameter upload feature is not activated the Start/Stop output (Option **R3**) remains fully compatible with the Start/Stop output (Option **R0**) used in the previous generation E-Series sensor family.

The upload feature supports the following sensor parameters:

- Measuring range
- Offset
- Gradient - (Shown as speed of the sonic-strain pulse (m/s) or inverse speed (µs/in.)
- Status
- Manufacturer number

The sensor's specific parameters can be retrieved by the controller and interface module at any time, via the sensor's Start/Stop signal lines.

The sensor parameter upload feature requires a customer supplied RS-422 interface. The data format is serial, 4800 Baud, 8-bit data length. Please contact the factory for additional parameter upload protocol details.

Sensor dimension references

Drawings are for reference only, contact applications engineering for tolerance specific information.

The model EH sensor shown in *'Figure* 4' can be ordered with flange styles M18 x1.5 or 3/4 -16 UNF-3A and a 7 mm or 10 mm diameter sensor rod. Magnets must be purchased separately; refer to *'Standard magnet Selections (Model EH)'* for standard magnet ordering information.

MODEL EH

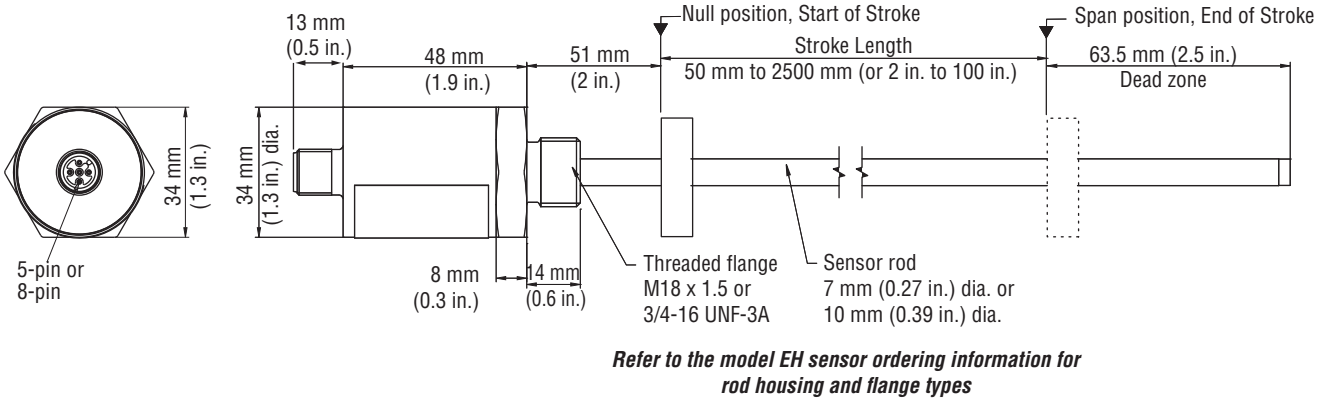

Refer to the model EH sensor ordering information for rod housing and flange types

Figure 4. E-Series model EH sensor dimension reference

Standard magnets, mounting and installation (Model EH)

Magnets must be ordered separately with Model EH rod-style sensors. The standard ring magnet (part number 201542-2) is suitable for most applications.

Refer to the Accessories section of this catalog for magnet selections and detailed mounting and installation information.

Connections and wiring (Model EH)

SENSOR INTEGRAL CONNECTOR (D34 AND D84) PINOUT/WIRE COLOR CODES

The E-Series Model EH sensor connects directly to a controller or interface module with the standard male, 5-pin or 8-pin integral connector and an extension cable as described in *'Table 1'* and *'Table 2'*.

Integral D34 connector (male) as viewed from the end of the sensor

Pin no.	Extension cable wire color	Signal/function Analog outputs
1	Brown	+24 Vdc
2	White	Output signal
3	Blue	DC ground (for power return)
4	Black	2nd Output signal (optional)
5	Gray	Ground for signal return

Table 1. Integral D34 sensor connector
(mates with cable connectors 370618 and 370619)

Integral D84 connector (male) as viewed from the end of the sensor

Pin no.	Extension cable wire color	Signal/function Start/Stop outputs
1	White	(+) Start
2	Brown	(-) Start
3	Green	(+) Stop
4	Yellow	(-) Stop
5	Gray	No connection
6	Pink	No connection
7	Blue	+24 Vdc
8	Red	DC Ground (0 Vdc) for power return

Table 2. Integral D84 sensor connector
(mates with cable connectors 370671 and 370672)

E-Series Model EH Sensor, Analog and Start/Stop Outputs
Ordering Information

Use the order matrix below to configure your Model EH sensor order number.

E	H							D			1			
1	2	3	4	5	6	7	8	9	10	11	12	13	14	15

2 or 3 digit code

SENSOR MODEL = E H — **1 - 2**

EH = E-Series model EH rod-style sensor (Magnet(s) must be ordered separately)

ROD HOUSING AND FLANGE TYPE = ☐ — **3**

K = Flange M18 x 1.5 / Rod 7 mm dia.
M = Flange M18 x 1.5 / Rod 10 mm dia.
W = Flange M18 x 1.5 / Rod 10 mm dia. (316L)
L = Flange 3/4 in. -16 / Rod 7 mm dia.
S = Flange 3/4 in. -16 / Rod 10 mm dia.
F = Flange 3/4 in. - 16 / Rod 10 mm dia. (316L)

STROKE LENGTH = ☐☐☐☐☐ — **4 - 8**

M = Millimeters (Encode in 5, 10, 25 or 50 mm increments) as indicated in *'Stroke length notes'* below.

U = Inches (Encode in 0.2, 0.5, 1 or 2 in. increments) as indicated in *'Stroke length notes'* below.

Stroke length Notes:

Stroke length ranges:
M = 50 mm to 2500 mm
U = 2 in. to 100 in.

The increment size between standard stroke lengths vary as shown below:

Stroke length (mm)	Ordering increment
≤ 500 mm	5 mm
> 500 mm and ≤ 750 mm	10 mm
> 750 mm and ≤ 1000 mm	25 mm
> 1000 mm and ≤ 2500 mm	50 mm
Stroke length (IN)	**Ordering increment**
≤ 20 in.	0.2 in.
> 20 in. and ≤ 30 in.	0.5 in.
> 30 in. and ≤ 40 in.	1 in.
> 40 in. and ≤ 100 in.	2 in.

SENSOR CONNECTION TYPES = D ☐☐ — **9 - 11**

D34 = 5-Pin (M12), male (Analog output)
D84 = 8-Pin (M12), male (Start/Stop output)

INPUT VOLTAGE = 1 — **12**

1 = + 24 Vdc (+20%, -15%), standard

OUTPUT = ☐☐☐ — **13 - 15**

VOLTAGE

V01 = 0 to 10 Vdc (1 output channel with 1 magnet)
V11 = 10 to 0 Vdc (1 output channel with 1 magnet)
V02 = 0 to 10 Vdc (2 output channels with 2 magnets) Refer to *'Dual magnet outputs'* for more information.
V12 = 10 to 0 Vdc (2 output channels with 2 magnets) Refer to Refer to *'Dual magnet outputs'* for more information.
V03 = 0 to 10 Vdc and 10 to 0 Vdc (2 output channels with 1 magnet)

CURRENT

A01 = 4 to 20 mA (1 output channel with 1 magnet)
A11 = 20 to 4 mA (1 output channel with 1 magnet)
A02 = 4 to 20 mA (2 output channels with 2 magnets) Refer to *'Dual magnet outputs'* for more information.
A12 = 20 to 4 mA (2 output channels with 2 magnets) Refer to *'Dual magnet outputs'* for more information.

START/STOP

R3 = Start/Stop with sensor parameters upload function
Start/Stop output (Option **R3**) is fully compatible with the Start/Stop output (Option **R0**) used in the previous generation E-Series sensors.

Temposonics®

Magnetostrictive, Absolute, Non-contact
Linear-Position Sensors

E-Series Model EH

CANopen Output

Data Sheet

MTS SENSORS

Document Part Number:
551313 Revision D

E-Series
Model EH

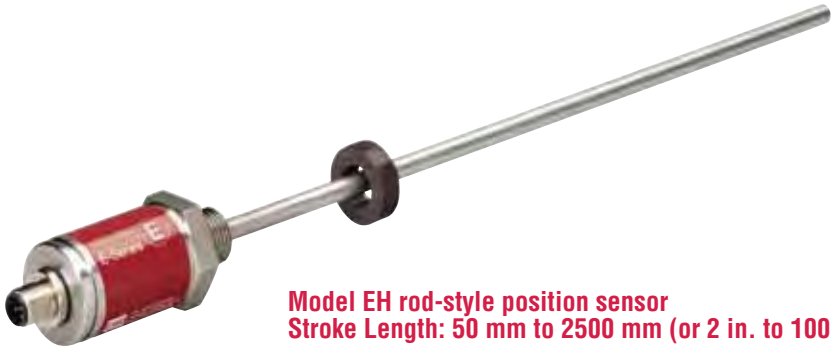

Model EH rod-style position sensor
Stroke Length: 50 mm to 2500 mm (or 2 in. to 100 in.)

FEATURES

- Linear, Absolute Measurement
- Non-Contact Sensing Technology
- Linearity Deviation Less Than 0.02% F.S.
- Repeatability Within 0.005% F.S.
- CANopen Interface:
  - Direct Position Output
  - Velocity Output
- Single or Dual Magnet Measurements
- Stroke Length Range: 50 mm to 2500 mm (or 2 in. to 100 in.)
- Hermetically-Sealed Stainless Steel For IP69K Ingress Protection
- EMI Shielded and CE Certified
- Also with Stainless Steel 1.4404 / AISI 316L available

BENEFITS

- Compact Stainless Steel Position Sensor, Designed For Use In Hydraulic Cylinders
  - Standard 10 mm dia. Sensor Rod For Typical Applications
  - Optional 7 mm dia. Sensor Rod For Use In Small Bore Cylinders
- Simultaneous Multi-position Measurements for 2 Magnets
- Over Voltage Protection to 36 Vdc and Polarity Protection up to -30 Vdc

APPLICATIONS

- Clevis Mounted or Space Limited Cylinder Applications
- Harsh Industrial Conditions
- High-Pressure Washdown
- Gates and Valve Control

TYPICAL INDUSTRIES

- Fluid Power
- Factory Automation
- Steel Mills
- Material Handling and Packaging
- Water Management

ISO 9001 CERTIFIED

Product overview

MTS Sensors continues to establish new performance standards for low-cost, fully-industrial, durable position sensors using the widely preferred magnetostrictive technology. This principle for accurate and non-contact measurement of linear-position sensing was developed 30 years ago by MTS and is used with outstanding success in a large variety of industrial applications. The Temposonics model EH sensor provides as much performance as you need for your application - you benefit from the advantages of magnetostrictive position measurement at optimum costs.

The Temposonics® Model EH sensor features a pressure resistant sensor rod for direct stroke measurement inside hydraulic cylinders. With its minimized sensor head and either a 7 mm or 10 mm rod, it is the ideal solution when space is critical. For long strokes, the model EH is available with measuring ranges up to 2500 mm (or 100 in.).

The model EH sensor offers completely sealed stainless-steel housing for long life position measurement for rugged environments. When installed with the appropriate mating connector and cable, it features protection up to IP69K and is suitable for high-pressure washdown applications.

Product specifications

Parameters	Specifications
OUTPUT	
Measured output variables:	Position, Velocity for single or dual magnets
Resolution:	**Position:** 10 µm, 20 µm **Velocity:** 1mm/s
Update times:	1.0 ms up to 2400 mm
Linearity deviation:	< ± 0.02% full stroke (minimum ± 60 µm)
Repeatability:	< ± 0.005% full stroke (minimum ± 10 µm)
Outputs:	**Interface:** CAN-Fieldbus System according to ISO/DIS 11898 **Data protocol:** CANopen Encoder Profile DS 406 V3.1 CiA Standard DS 301 v3.0

Baud rate, kBit/s:	1000	800	500	250	125
Cable length, m:	< 25	< 50	< 100	< 250	< 500

Stroke length:	**Range:** 50 mm to 2500 mm (or 2 in. to 100 in.)
ELECTRONICS	
Operating voltage:	**+24 Vdc nominal:** -15% or +20% * **Polarity protection:** ≥ -30 Vdc **Over voltage protection:** ≤ 36 Vdc **Current drain:** 40 to 60 mA *(Stroke length dependent)* **Dielectric withstand voltage:** 500 Vdc (DC ground to machine ground)

Parameters	Specifications
ENVIRONMENTAL	
Operating conditions:	**Operating temperature:** -40 °C (-40 °F) to 75 °C (167 °F) **Relative humidity:** 90% no condensation **Ingress protection:** IP69K *(when appropriate mating connector is correctly fitted)* **
EMC test:	**Electromagnetic emission:** EN 61000-6-4 (for use in industrial environment) **Electromagnetic immunity:** EN 61000-6-2. The sensor meets the requirements of the EC directives and is marked with CE.
Shock rating:	100 g (single hit)/ IEC standard EN 60068-2-27
Vibration rating:	15 g/10 to 2000 Hz, IEC standard EN 60068-2-6 (resonance frequencies excluded)
WIRING	
Connection type:	5-pin (M12) male integral connector
ROD-STYLE SENSOR (MODEL EH)	
Sensor housing:	Stainless Steel 1.4305 / AISI 303; Stainless Steel 1.4404 / AISI 316L
Sensor rod:	Stainless Steel 1.4301 / AISI 304; Stainless Steel 1.4404 / AISI 316L for 10 mm diameter rod only
Operating pressure:	**7 mm Rod:** 300 bar static, 350 bar peak (4350 psi static , 5076 psi peak) **10 mm rod:** 350 bar static, 450 bar peak (5076 psi static , 6526 psi peak)
Mounting:	Any orientation. Threaded flange M18x1.5 or 3/4-16 UNF-3A
Typical mounting torque:	45 N-m (33 ft. - lbs.)
Magnet types:	Ring magnet, open-ring magnet or magnet float

* UL Recognition requires an approved power supply with energy limitation (UL 61010-1), or Class 2 rating according to the National Electrical Code (USA) / Canadian Electrical Code.

** The IP rating is not part of the UL Recognition.

CANopen communication and functionality

Temposonics linear-position sensors fulfill all requirements of CANbus (ISO 11898). The sensor's electronics convert the position measurements into bus oriented outputs and transfer this data directly to the controller. The CANbus interface is appropriate for serial data transfer up to 1 Mbps maximum. Sensor integrated software supports bus profile CANopen. This communication protocol allows for a comprehensive customized configuration of the sensor-bus system.

TEMPOSONICS E-SERIES SENSORS WITH CANOPEN INTERFACE

E-Series sensors with CANopen protocol are based as bus-nodes on the OSI reference model and are available with application data for single or dual-magnet measurements:

APPLICATION DATA:

- Position measurement
- Velocity measurement
- Setpoints
- Status

CANopen corresponds to encoder profile 'DS-406 V3.1 (CiA Draft standard DS-301 V3.0)'. The CANopen functionality is described below in the following communication objects.

CANopen CONFIGURATION TOOL

The EDS (Electronic Data Sheet) download is available at www.mtssensors.com for configuration.

SERVICE DATA OBJECT (SDO)

The SDO is mainly used for sensor configuration. SDO messages are used for read and write access to all entries in the object directory.

Selectable parameters are as follows:

- Operational range setup for magnets 1 and 2
- Zero adjustment preset for magnets 1 and 2
- 4 set points for each magnet

PROCESS DATA OBJECT (PDO)

The PDO provides data transfer of sensor measurements in up to 8-byte data blocks. The sensor uses PDO's to relay parameters for each magnet in one or two PDO's

DATA FORMATS:

- Position
- Velocity
- Limit status
- Limit status of operational range

PDO TRANSMISSION TYPES

- Asynchronous (cycle time of 1 to 65.535 ms) or synchronous
- Synchronization Object (SYNC) messages are sent from the controller to the sensor, the sensor then transmitts measurement values

SYNC OBJECT

Is responsible for synchronized bus communication

EMERGENCY OBJECT

Emergency messages are transmitted as:

- Sensor signal breakdown
- Communication fault

Dual magnet outputs

MEASUREMENT OPTIONS

E-Series sensors provide options for simultaneous multi-position measurements by using up to two magnets per sensor.

The options for single-magnet or dual-magnets is specified in the sensor model number when ordered. For single-magnet sensors the sensor's full active stroke length is utilized by the one magnet. For example when using forward-acting outputs, the output is 0% of its value when the magnet is at the null position (start of stroke) and 100% of its value when at the edge of the dead zone (end of stroke), *(see 'Figure 1').*

However, for dual-magnet sensors the sensor's active stroke length must be shared by the two magnets, and a separation > or = to 75 mm (3 in.) must be maintained between the two magnets (front side of the first magnet to front side of the second magnet). This minimum distance between magnets is needed to maintain proper sensor output. Therefore, for the second magnet the start of stroke (0% output) is set at 75 mm away from the sensor's null position. Likewise, for the first magnet the end of stroke (100% output) is now set 75 mm away from the edge of the dead zone *(see 'Figure 1').*

The result of using the dual-magnet E-Series options is that the stroke length available for each magnet is 75 mm less (or 3 inches less when specifying stroke length in inches) than the sensor's full active stroke length as indicated in the model number.

When ordering the single-magnet E-Series sensor the minimum stroke length available is 50 mm or 2 inches. However when ordering dual magnet E-Series sensors the minimum stroke length available is 125 mm (i.e. 50 mm minimum, plus 75 mm for the minimum distance between magnets). Likewise, when specifying stroke length in inches the minimum stroke length available is 5 inches (i.e. 2 inch minimum, plus 3 inches for the minimum distance between magnets).

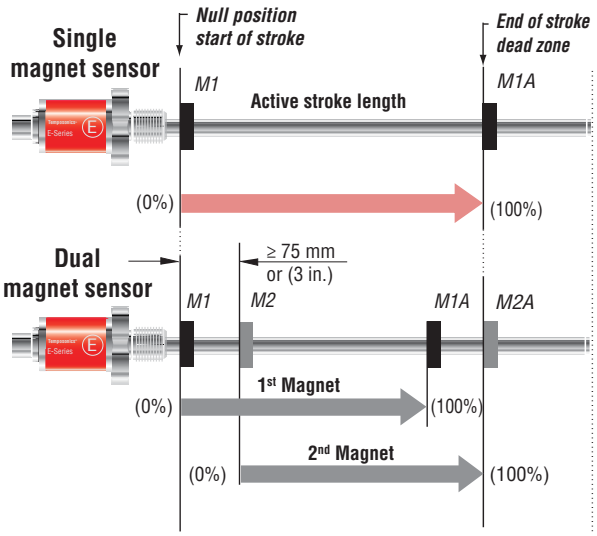

Figure 3. Single and dual-magnet measurements

Sensor dimension references

Drawings are for reference only, contact applications engineering for tolerance specific information.

The model EH sensor shown in *'Figure 2'* can be ordered with flange styles M18 x1.5 or 3/4 -16 UNF-3A and a 7 mm or 10 mm diameter sensor rod. Magnets must be purchased separately; refer to *'Standard magnet Selections (Model EH)'* for standard magnet ordering information.

MODEL EH

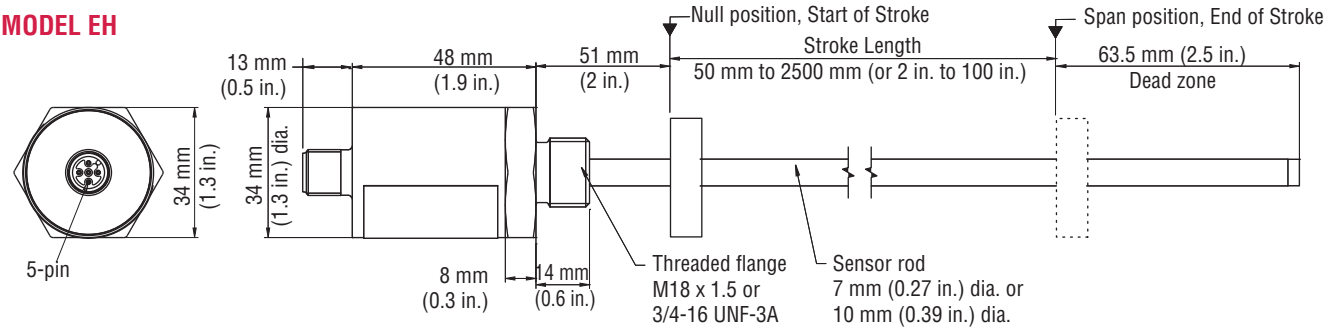

Figure 2. *E-Series model EH sensor dimension reference*

Refer to the model EH sensor ordering information for rod housing and flange types

Standard magnets, mounting and installation (Model EH)

Magnets must be ordered separately with Model EH rod-style sensors. The standard ring magnet (part number 201542-2) is suitable for most applications.

Refer to the Accessories section of this catalog for magnet selections and detailed mounting and installation information.

Connections and wiring (Model EH)

SENSOR INTEGRAL CONNECTOR (D34) PINOUT/WIRE COLOR CODES

The E-Series Model EH sensor connects directly to a controller or interface module with the standard male, 5-pin integral connector and an extension cable as described in *'Table 1'*

Integral D34 connector (male) as viewed from the end of the sensor

Pin no.	Signal/function CANopen outputs
1	Shield
2	+24 Vdc
3	DC ground (for power return)
4	CAN (+)
5	CAN (-)

Integral D34 sensor connector

E-Series Model EH Sensor, CANopen Output
Ordering Information

E	H							D	3	4	1	C		0	4			1	Z		
1	2	3	4	5	6	7	8	9	10	11	12	13	14	15	16	17	18	19	20	21	22

(Use the order matrix above to configure your Model EH sensor order number)

SENSOR MODEL = E H **1 - 2**

EH = E-Series model EH rod-style sensor (Magnet(s) must be ordered separately)

HOUSING STYLE = ☐ **3**

K = Flange M18 x 1.5 / Rod 7 mm dia.
M = Flange M18 x 1.5 / Rod 10 mm dia.
W = Flange M18 x 1.5 / Rod 10 mm dia. (316L)
L = Flange 3/4 in. -16 / Rod 7 mm dia.
S = Flange 3/4 in. -16 / Rod 10 mm dia.
F = Flange 3/4 in. -16 / Rod 10 mm dia. (316L)

STROKE LENGTH = ☐☐☐☐☐ **4 - 8**

_ _ _ _ M = Millimeters (Encode in 5, 10, 25 or 50 mm increments) as indicated in *'Stroke length notes'* below.
_ _ _ . _ U = Inches (Encode in 0.2, 0.5, 1 or 2 in. increments) as indicated in *'Stroke length notes'* below.

Stroke Length Notes:

Stroke length ranges:
M = 50 mm to 2500 mm
U = 2 in. to 100 in.

The increment size between standard stroke lengths vary as shown below:

Stroke length (mm)	Ordering increment
≤ 500 mm	5 mm
> 500 mm and ≤ 750 mm	10 mm
> 750 mm and ≤ 1000 mm	25 mm
> 1000 mm and ≤ 2500 mm	50 mm
Stroke length (IN)	**Ordering increment**
≤ 20 in.	0.2 in.
> 20 mm and ≤ 30 mm	0.5 in.
> 30 mm and ≤ 40 mm	1 in.
> 40 in. and ≤ 100 in.	2 in.

SENSOR CONNECTION TYPES = D 3 4 **9 - 11**

D34 = 5-Pin (M12), male, (CANopen output)

INPUT VOLTAGE = 1 **12**

1 = + 24 Vdc (+20%, -15%), standard

OUTPUT = C 0 4 1 **13-19**

C _ _ _ _ _ _ = CANopen output - Enter the 6-digit output code (1-6) defined by the selections below:
[1] [2] [3] [4] [5] [6]

[1] [2] [3] Protocol	[4] Baud rate	[5] Resolution	[6] type
304 = CANopen 1 or 2 magnets	1 = 1000 kBit/s	4 = 10 µm	1 = Standard
404 = CANopen 1 or 2 magnets with integrated bus terminator resistor (120 Ohms)	2 = 500 kBit/s	5 = 20 µm	
	3 = 250 kBit/s		
	4 = 125 kBit/s		

NUMBER OF MAGNETS (20-22) FOR MULTI-POSITION MEASUREMENT ONLY = Z ☐ ☐ **20-22**

Z + Enter a 2-digit code
Z _ _ = Enter 02 for 2 magnets

Temposonics®

Magnetostrictive, Absolute, Non-contact
Linear-Position Sensors

E-Series Model EH

Synchronous Serial Interface (SSI) Output

Data Sheet

MTS SENSORS

Document Part Number:
551314 Revision D

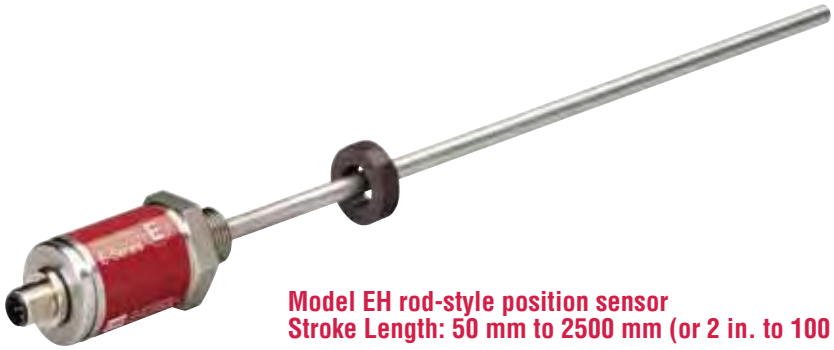

Model EH rod-style position sensor
Stroke Length: 50 mm to 2500 mm (or 2 in. to 100 in.)

FEATURES

- Linear, Absolute Measurement
- Non-Contact Sensing Technology
- Linearity Deviation Less Than 0.02% F.S.
- Repeatability Within 0.005% F.S.
- SSI Provides a High-Speed Noise Immune and Cost Effective Sensor interface
- Stroke Length Range: 50 mm to 2500 mm (or 2 in. to 100 in.)
- Hermetically-Sealed Stainless Steel For IP69K Ingress Protection
- EMI Shielded and CE Certified
- Also with Stainless Steel 1.4404 / AISI 316L available

BENEFITS

- Compact Stainless Steel Position Sensor, Designed For Use In Hydraulic Cylinders
  - Standard 10 mm dia. Sensor Rod For Typical Applications
  - Optional 7 mm dia. Sensor Rod For Use In Small Bore Cylinders
- Resolution Down to 20 µm
- Direct 24/25 Bit SSI Output, Gray/Binary Formats
- Over Voltage Protection to 36 Vdc and Polarity Protection up to -30 Vdc

APPLICATIONS

- Clevis Mounted or Space Limited Cylinder Applications
- Harsh Industrial Conditions
- High-Pressure Washdown
- Gates and Valve Control

TYPICAL INDUSTRIES

- Fluid Power
- Factory Automation
- Steel Mills
- Material Handling and Packaging
- Water Management

ISO 9001 CERTIFIED

Product overview

MTS Sensors continues to establish new performance standards for low-cost, fully-industrial, durable position sensors using the widely preferred magnetostrictive technology. This principle for accurate and non-contact measurement of linear-position sensing was developed 30 years ago by MTS and is used with outstanding success in a large variety of industrial applications. The Temposonics model EH sensor provides as much performance as you need for your application - you benefit from the advantages of magnetostrictive position measurement at optimum costs.

The Temposonics® Model EH sensor features a pressure resistant sensor rod for direct stroke measurement inside hydraulic cylinders. With its minimized sensor head and either a 7 mm or 10 mm rod, it is the ideal solution when space is critical. For long strokes, the model EH is available with measuring ranges up to 2500 mm (or 100 in.).

The model EH sensor offers completely sealed stainless-steel housing for long life position measurement for rugged environments. When installed with the appropriate mating connector and cable, it features protection up to IP69K and is suitable for high-pressure washdown applications.

Product specifications

Parameters	Specifications
OUTPUT	
Measured output variable:	Position
Resolution:	20 µm, 50 µm, 100 µm
Update rate:	

Measuring length:	300 mm	750 mm	1000 mm	2000 mm
Measurements/Sec.:	3.7 kHz	3.0 kHz	2.3 kHz	1.2 kHz

Parameters	Specifications
Linearity deviation:	< ± 0.02% full stroke (minimum ± 60 µm)
Repeatability:	< ± 0.005% full stroke (minimum ± 20 µm)
Outputs:	**Interface:** Synchronous Serial Interface (SSI). (RS-422 type differential signal pairs) **Data format:** Binary or gray **Data length:** 24 or 25 bit **Data speed (Baud rate):** 70 kBd to 1 MBd, depending on cable length (see below)

Length (m):	<3	<50	<100	<200	<400
Baud rate:	1.0 MBd	<400 kBd	<300 kBd	<200 kBd	<100 kBd

Parameters	Specifications
Stroke length:	**Range:** 50 mm to 2500 mm (or 2 to 100 in.)
ELECTRONICS	
Operating voltage:	**+24 Vdc nominal:** -15% or +20% * **Polarity protection:** ≥ -30 Vdc **Over voltage protection:** ≤ 36 Vdc **Current drain:** 90 mA typical **Dielectric withstand voltage:** 500 Vdc (DC ground to machine ground)

* UL Recognition requires an approved power supply with energy limitation (UL 61010-1), or Class 2 rating according to the National Electrical Code (USA) / Canadian Electrical Code.

** The IP rating is not part of the UL Recognition.

Parameters	Specifications
ENVIRONMENTAL	
Operating conditions:	**Operating temperature:** -40 °C (-40 °F) to 75 °C (167 °F) **Relative humidity:** 90% no condensation **Ingress protection:** IP69K *(when appropriate mating connector is correctly fitted)* **
EMC test:	**Electromagnetic emission:** EN 61000-6-3 **Electromagnetic immunity:** EN 61000-6-2 The sensor meets the requirements of the EC directives and is marked with CE
Shock rating:	100 g (single hit)/ IEC standard EN 60068-2-27
Vibration rating:	15 g/10 to 2000 Hz, IEC standard EN 60068-2-6 (resonance frequencies excluded)
WIRING	
Connection type:	8-pin (M12) male integral connector
ROD-STYLE SENSOR (MODEL EH)	
Sensor housing:	Stainless Steel 1.4305 / AISI 303; Stainless Steel 1.4404 / AISI 316L
Sensor rod:	Stainless Steel 1.4301 / AISI 304; Stainless Steel 1.4404 / AISI 316L for 10 mm diameter rod only
Operating pressure:	**7 mm Rod:** 300 bar static, 350 bar peak (4350 psi static, 5076 psi peak) **10 mm Rod:** 350 bar static, 450 bar peak (5076 psi static, 6526 psi peak)
Mounting:	Any orientation. Threaded flange M18 x 1.5 or 3/4 - 16 UNF-3A
Typical mounting torque:	45 N-m (33 ft. - lbs.)
Magnet types:	Ring magnet, open-ring magnet or magnet float

Synchronous Serial Interface (SSI)

Temposonics E-Series sensors with SSI fulfill all requirements of the SSI standard for an absolute encoder. The position value is encoded in a 24/25 code format and is transmitted at high speed in SSI standard format to the control device. The main feature of SSI is the synchronized data transfer. Data transfer synchronization simplifies the closed-loop control system. A clock pulse train from a controller is used to gate out sensor data. One bit of position data is transmitted to the controller for each clock pulse received by the sensor *(see 'Figures 1 and 2')*. The absolute position data is continually updated by the sensor and converted by the shift register into serial information. *(see 'Figure 3')*.

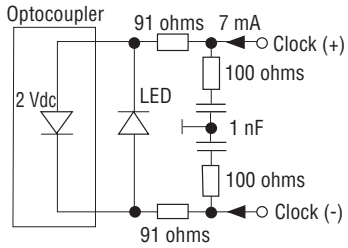

Figure 1. Sensor input

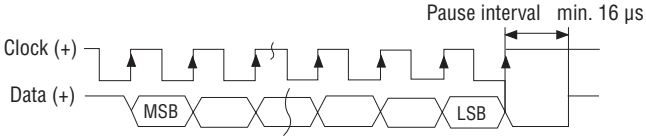

Timing Diagram

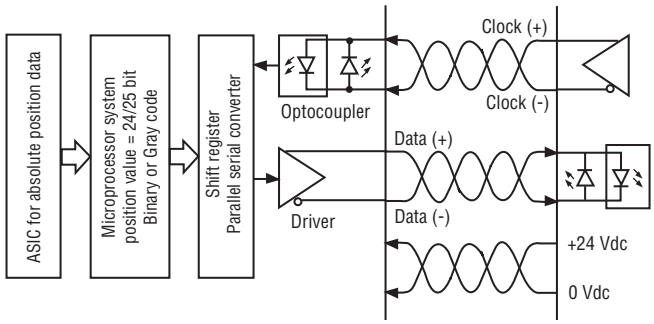

Logic Diagram

Sensor dimension references

Drawings are for reference only, contact applications engineering for tolerance specific information.

The model EH sensor shown in *'Figure* 4' can be ordered with flange styles M18 x1.5 or 3/4 -16 UNF-3A and a 7 mm or 10 mm diameter sensor rod. Magnets must be purchased separately; refer to *'Standard magnet Selections (Model EH)'* for standard magnet ordering information.

MODEL EH

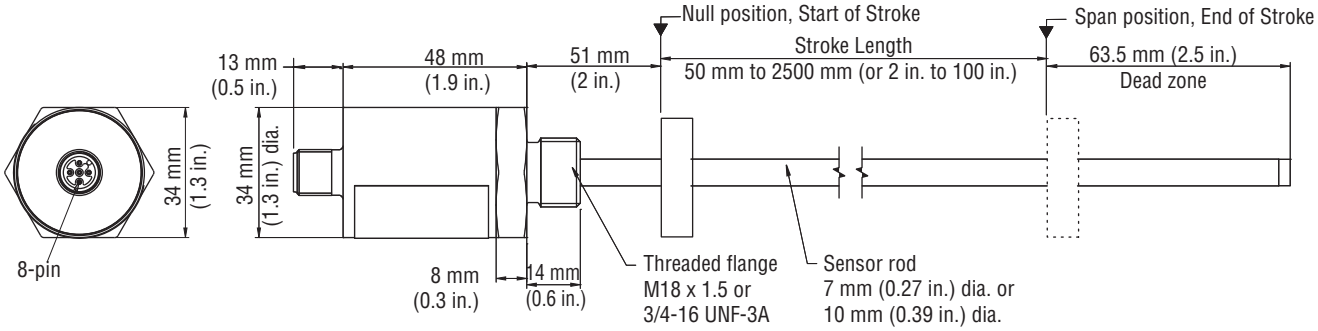

Refer to the model EH sensor ordering information for rod housing and flange types

Figure 4. E-Series model EH sensor dimension reference

Standard magnets, mounting and installation (Model EH)

Magnets must be ordered separately with Model EH rod-style sensors. The standard ring magnet (part number 201542-2) is suitable for most applications.

Refer to the Accessories section of this catalog for magnet selections and detailed mounting and installation information.

Connections and wiring (Model EH)

SENSOR INTEGRAL CONNECTOR (D84) PINOUT/WIRE COLOR CODES

The E-Series Model EH sensor connects directly to a controller or interface module with the standard male, 8-pin integral connector and an extension cable as described in *'Table 1'*

Integral D84 connector (male) as viewed from the end of the sensor

Pin no.	Extension cable wire color	Signal/function
1	White	Clock (+)
2	Brown	Clock (-)
3	Green	Data (+)
4	Yellow	Data (-)
5	Gray	No connection
6	Pink	No connection
7	Blue	+24 Vdc
8	Red	DC ground (for power return)

Table 1. Integral D84 sensor connector

E	H							D	8	4	1	S				1	0	0
1	2	3	4	5	6	7	8	9	10	11	12	13	14	15	16	17	18	19

(Use the order matrix above to configure your Model EH sensor order number)

SENSOR MODEL = E H 1 - 2

EH = E-Series model EH rod-style sensor (Magnet(s) must be ordered separately)

ROD HOUSING AND FLANGE TYPE = 3

K = Flange M18 x 1.5 / Rod 7 mm dia.
M = Flange M18 x 1.5 / Rod 10 mm dia.
W = Flange M18 x 1.5 / Rod 10 mm dia. (316L)
L = Flange 3/4 in. -16 / Rod 7 mm dia.
S = Flange 3/4 in. -16 / Rod 10 mm dia.
F = Flange 3/4 in. -16 / Rod 10 mm dia. (316L)

STROKE LENGTH = 4 - 8

_ _ _ _ M = Millimeters (Encode in 5, 10, 25 or 50 mm increments) as indicated in *'Stroke length notes'* below.

_ _ _ . _ U = Inches (Encode in 0.2, 0.5, 1 or 2 in. increments) as indicated in *'Stroke length notes'* below.

Stroke Length Notes:

Stroke length ranges:
M = 50 mm to 2500 mm
U = 2 in. to 100 in.

The increment size between standard stroke lengths vary as shown below:

Stroke length (mm)	Ordering increment
< 500 mm	5 mm
> 500 mm and ≤ 750 mm	10 mm
> 750 mm and ≤ 1000 mm	25 mm
> 1000 mm and ≤ 2500 mm	50 mm
Stroke length (IN)	**Ordering increment**
≤ 20 in.	0.2 in.
> 20 in. and ≤ 30 in.	0.5 in.
> 30 in. and ≤ 40 in.	1 in.
> 40 in. and ≤ 100 in.	2 in.

SENSOR CONNECTION TYPES = D 8 4 9 - 11

D84 = 8-Pin (M12), male, (SSI output)

INPUT VOLTAGE = 1 12

1 = + 24 Vdc (+20%, -15%), standard

OUTPUT = S 1 0 0 13-19

S _ _ _ _ _ _ = SSI output - Enter the 6-digit output code (1-6) defined by the selections below:
[1] [2] [3] [4] [5] [6]

[14] Data length
1 = 25 bits
2 24 bits

[15] Output format
B = Binary
G = Gray code

[16] Resolution
3 = 0.05 mm
4 = 0.1 mm
5 = 0.02 mm

[17] Performance
1 = Standard

[18] [19] Signal options (scale orientation)
00 = Measuring direction forward, async

Temposonics®

Magnetostrictive, Absolute, Non-contact
Linear-Position Sensors

E-Series Models EP and EL

Analog and Start/Stop Outputs

Data Sheet

MTS SENSORS

Document Part Number:
551248 Revision A

E-Series Models EP/EL

Model EP position sensor - Full Size Profile Housing
Stroke Length: 50 mm to 3000 mm (2 in. to 120 in.)

Model EL position sensor - Low Height Profile Housing
Stroke Length: 50 mm to 2500 mm (2 in. to 100 in.)

FEATURES

- Linear, Absolute Measurement
- Non-Contact Sensing Technology
- Linearity Deviation Less Than 0.02% F.S.
- Repeatability Within 0.005% F.S.
- Two Outputs Available:
  - Analog (Voltage/Current) Forward or Reverse Acting
  - Start/Stop outputs
- Simple Sensor Parameter Upload (for Start/Stop)
- Stroke Length Ranges:
  - 50 mm to 2500 mm (2 in. to 100 in.)
  - 50 mm to 3000 mm (2 in. to 120 in.)
    For Model EP Start/Stop
- EMI Shielded and CE Certified

BENEFITS

- Rugged, Cost Effective, Precise and Durable Non-wear Alternative to Potentiometers
- Simultaneous Multi-position Measurements
- Over Voltage Protection to 36 Vdc and Polarity Protection up to -30 Vdc

APPLICATIONS

- Continuous Operation In Harsh Industrial Conditions

TYPICAL INDUSTRIES

- Factory Automation
- Woodworking and Metal Forming
- Material Handling and Packaging

ISO 9001 CERTIFIED

Product overview

MTS Sensors continues to establish new performance standards for low-cost, fully-industrial, durable position sensors using the widely preferred magnetostrictive technology. This principle for accurate and non-contact measurement of linear-position sensing was developed 30 years ago by MTS and is used with outstanding success in a large variety of industrial applications.

The Temposonics models EP and EL sensors consists of robust aluminum profile-style housings that offer flexible mounting configurations and easy installation. Sensor models EP and EL are ideal for demanding industrial applications where simple, reliable non-contact feedback is essential.

Product specifications

Parameters	Specifications
OUTPUT	
Measured output variables:	Position
Resolution:	**Analog:** Infinite (restricted by output ripple) **Start/Stop:** 0.1, 0.01 and 0.005 mm (controller dependent)
Linearity deviation:	< ± 0.02% full stroke (minimum ± 60 µm)
Repeatability:	< ± 0.005% full stroke (minimum ± 20 µm)
Outputs:	**Analog (voltage or current)** **Voltage:** 0 to 10 Vdc or 10 to 0 Vdc or **Two outputs:** 0 to 10 Vdc and/or 10 to 0 Vdc (controller input resistance RL ≥ 5k Ohm) **Current:** 4 to 20 mA or 20 to 4 mA (Controller input resistance RL ≤ 500 Ohm) **Digital-pulse (Start/Stop):** RS-422 differential signal **Serial parameter upload available for:** Measuring range, offset, gradient, status and manufacturer number
Stroke length:	**Range:** 50 mm to 2500 mm (2 in. to 100 in.) **or** 50 mm to 3000 mm (2 in. to 120 in.) *For Model EP Start/Stop output*

Parameters	Specifications
ELECTRONICS	
Operating voltage:	**+24 Vdc nominal:** -15% or +20%* **Polarity protection:** up to -30 Vdc **Over voltage protection:** up to 36 Vdc **Current drain:** Analog: 50 - 140 mA Start/Stop: 50 - 100 mA *(Stroke length dependent)* **Dielectric withstand voltage:** 500 Vdc (DC ground to machine ground)
ENVIRONMENTAL	
Operating conditions:	**Operating temperature:** -40 °C (-40 °F) to 75 °C (167 °F) **Relative humidity:** 90% no condensation **Ingress protection:** IP 67** *(when mating connector is correctly fitted)*
EMC test:	**Electromagnetic emission:** EN 61000-6-4 **Electromagnetic susceptibility:** EN 61000-6-2 This sensor meets the requirements of the EC directives and is marked with CE.
Shock rating:	100 g (single hit)/ IEC standard EN 60068-2-27
Vibration rating:	15 g/10 to 2000 Hz, IEC standard EN 60068-2-6 (resonance frequencies excluded)
WIRING	
Connection types:	**Analog output:** 5-pin (M12) male integral connector **Start/Stop output:** 8-pin (M12) male integral connector
PROFILE-STYLE SENSOR	
Electronic head:	Aluminum housing
Sensor extrusion:	Aluminum (Temposonics profile style)
Mounting:	Adjustable mounting clamps
Magnet types:	Captive-sliding magnets, open-ring magnet or block magnet

* UL Recognition requires an approved power supply with energy limitation (UL 61010-1), or Class 2 rating according to the National Electrical Code (USA) / Canadian Electrical Code.

** The IP rating is not part of the UL Recognition.

Outputs

ANALOG (VOLTAGE/CURRENT) OUTPUTS

Analog outputs include voltage (0 to 10 Vdc forward or reverse acting), and current (4 to 20 mA forward or reverse acting). Since the outputs are direct, no signal conditioning electronics are needed when interfacing with controllers or meters *(see 'Figure 1')*.

Analog output voltages ranges:

- 0 to 10 Vdc
- 10 to 0 Vdc
- 0 to 10 Vdc and 10 to 0 Vdc
- 4 to 20 mA
- 20 to 4 mA

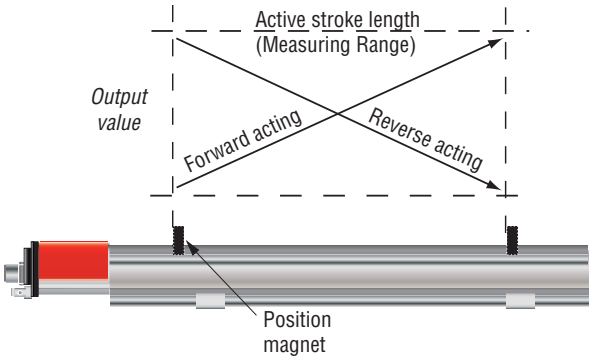

Figure 1. Analog Output signals

DIGITAL START/STOP OUTPUT

Temposonics E-Series Models EP and EL Start/Stop output sensors require a start signal from a controller or interface module to initiate the measurement cycle. The sensor generates a stop signal at the end of the measurement cycle that is used to stop the controller's counter clock.

The elapsed time between the Start and Stop signals is directly proportional to the magnet's position along the active stroke length. The controller can calculate the absolute position of the magnet from the time value and the sensor's unique gradient value (inverse of the speed for the sonic pulse traveling in the sensor's waveguide). *(see 'Figure 2')*.

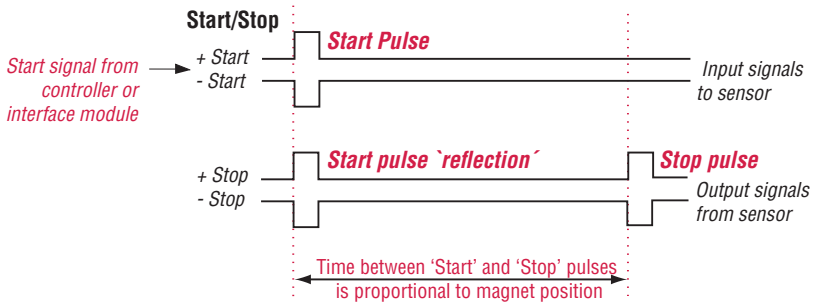

Figure 2. Start/Stop output signals (RS-422 differential pairs)

Dual magnet outputs

MEASUREMENT OPTIONS

E-Series sensors provide options for simultaneous multi-position measurements by using more than one magnet per sensor. When using Start/Stop sensor output the ability to process multiple magnets depends on the capability of the controller or interface module that is used. When using analog type outputs (voltage or current) the sensor is limited to a maximum of two magnets.

For analog output types the options for single-magnet or dual-magnets is specified in the sensor model number when ordered. For single-magnet sensors the sensor's full active stroke length is utilized by the one magnet. For example when using forward-acting outputs, the output is 0% of its value when the magnet is at the null position (start of stroke) and 100% of its value when at the edge of the dead zone (end of stroke), *(see 'Figure 3')*.

However, for dual-magnet sensors the sensor's active stroke length must be shared by the two magnets, and a separation > or = to 75 mm (3 in.) must be maintained between the two magnets (front side of the first magnet to front side of the second magnet). This minimum distance between magnets is needed to maintain proper sensor output. Therefore, for the second magnet the start of stroke (0% output) is set at 75 mm away from the sensor's null position. Likewise, for the first magnet the end of stroke (100% output) is now set 75 mm away from the edge of the dead zone *(see 'Figure 3')*.

The result of using the dual-magnet E-Series options is that the stroke length available for each magnet is 75 mm less (or 3 inches less when specifying stroke length in inches) than the sensor's full active stroke length as indicated in the model number.

When ordering the single-magnet E-Series sensor the minimum stroke length available is 50 mm or 2 inches. However when ordering dual magnet E-Series sensors the minimum stroke length available is 125 mm (i.e. 50 mm minimum, plus 75 mm for the minimum distance between magnets). Likewise, when specifying stroke length in inches the minimum stroke length available is 5 inches (i.e. 2 inch minimum, plus 3 inches for the minimum distance between magnets).

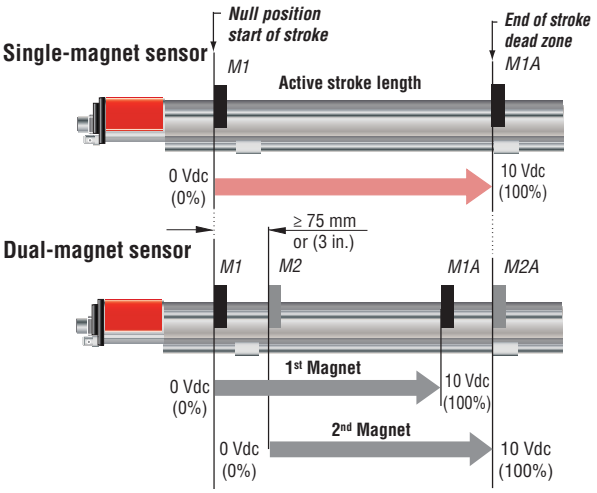

Figure 3. Single and dual magnet measurements

Communication

SENSOR PARAMETER UPLOAD FEATURE

For applications using smart sensor interfaces, the Models EP and EL sensors with Start/Stop output *(Option **R3**)* comes with the ability to perform sensor parameter uploads. This feature replaces the task of entering sensor data manually, saving time and preventing possible entry errors during start-up or for system maintenance.

Note: Start/Stop output (option R3)

When the sensor parameter upload feature is not activated the Start/Stop output (Option **R3**) remains fully compatible with the Start/Stop output (Option **R0**) used in the previous generation E-Series sensors.

The upload feature supports the following sensor parameters:

- Measuring range
- Offset
- Gradient - (Shown as speed of the sonic-strain pulse (m/s) or inverse speed (µs/in.)
- Status
- Manufacturer number

The sensor's specific parameters can be retrieved by the controller/interface module at any time, via the sensor's Start/Stop signal lines.

The sensor parameter upload feature requires a customer supplied RS-422 interface. The data format is serial, 4800 Baud, 8-bit data length. Please contact the factory for additional parameter upload protocol details.

Sensor dimension references

Drawings are for reference only, contact applications engineering for tolerance specific information.

A robust aluminum extrusion forms the sensor housing containing the sensing element and electronics. The position magnet moves along the top of the profile extrusion housing.

MODEL EP

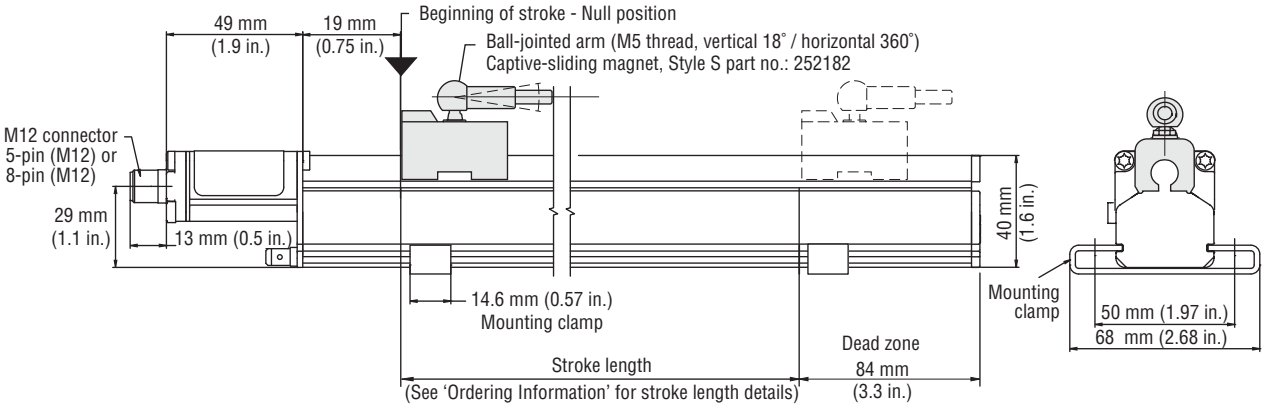

Figure 4. E-Series model EP sensor dimension reference (Shown with Style S captive-sliding magnet)

MODEL EL

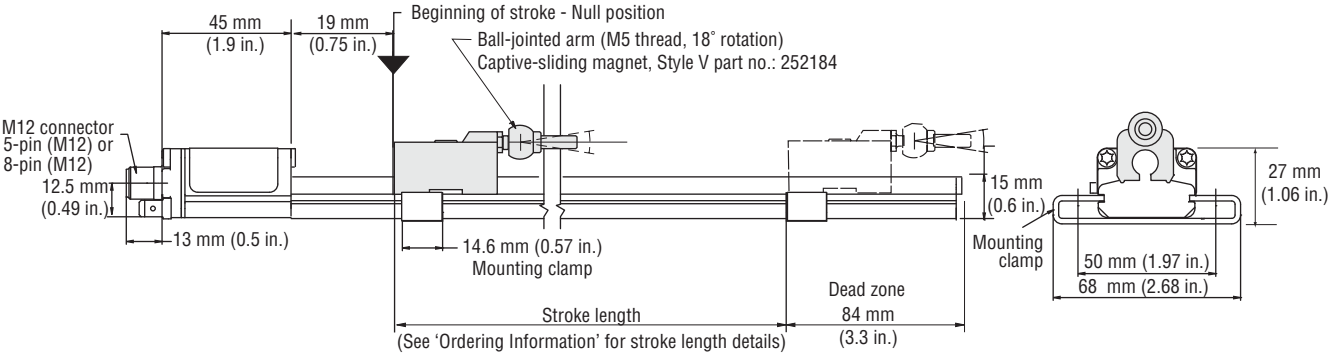

Figure 5. E-Series model EL sensor dimension reference (Shown with Style V captive-sliding magnet)

Sensor dimension references

Drawings are for reference only, contact applications engineering for tolerance specific information.

MODEL EP

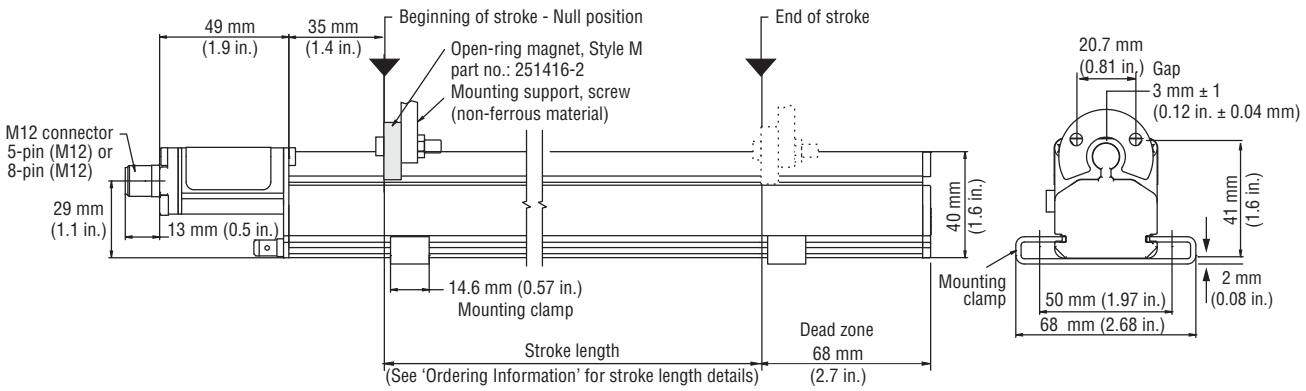

Figure 6. E-Series model EP sensor dimension reference (Shown with Style M open-ring magnet)

MODEL EP

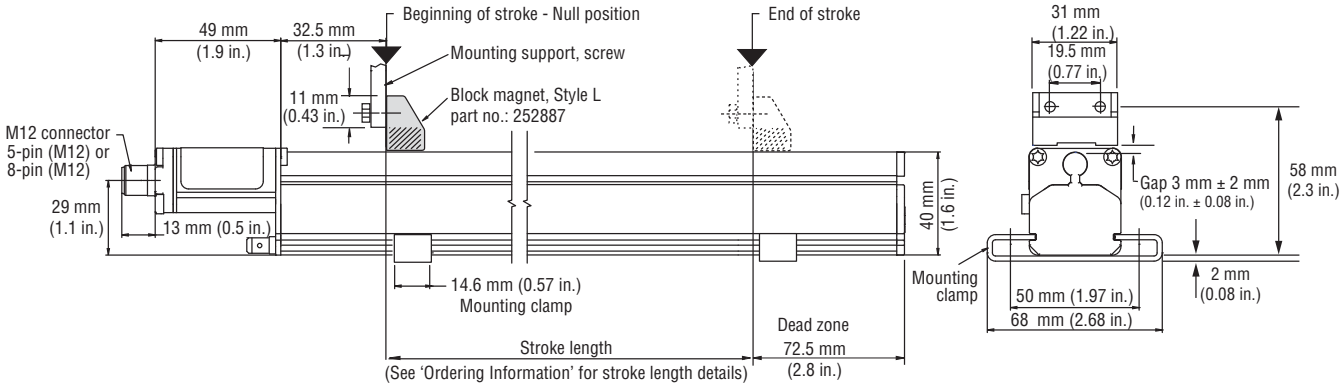

Figure 7. E-Series model EP sensor dimension reference (Shown with Style L block magnet)

Standard magnet selections, mounting and installation (Model EP and EL)

Temposonics Model EP full-size profile-style and EL low height profile-style sensors have side grooves for use with mounting clamps. The mounting clamps can be positioned along the sensor extrusion to best secure the sensor for each particular application.

Refer to the Accessories section of this catalog for magnet selections and detailed mounting and installation information.

Connections and wiring (Models EP and EL)

SENSOR INTEGRAL CONNECTOR (D34 AND D84) PINOUT/WIRE COLOR CODES

The E-Series models EP and EL sensors connect directly to a controller or interface module with the standard male, 5-pin or 8-pin integral connector and an extension cable as described in *'Table 1'* and *'Table 2'*.

Attention:

The sensors aluminum housing has an anodic coating which prevents the sensor's mounting clamps from providing the appropriate grounding. A grounding lug (see 'Figure 78') is provided near the connector end of the sensor for a convenient connection to earth ground. The appropriate grounding of the cable shield is also required at the controller end.

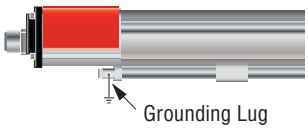

Figure 8. Grounding lug location.

Integral D34 connector (male) as viewed from the end of the sensor

Pin no.	Extension cable wire color	Signal/function analog outputs
1	Brown	+24 Vdc
2	White	Output signal
3	Blue	DC ground (for power return)
4	Black	2nd Output signal (optional)
5	Gray	Ground for signal return

Table 2. Integral D34 sensor connector (mates with cable connectors 370618 and 370619)

Integral D84 connector (male) as viewed from the end of the sensor

Pin no.	Extension cable wire color	Signal/function Start/Stop outputs
1	White	(+) Start
2	Brown	(-) Start
3	Green	(+) Stop
4	Yellow	(-) Stop
5	Gray	No connection
6	Pink	No connection
7	Blue	+24 Vdc
8	Red	DC ground (for power return)

Table 3. Integral D84 sensor connector (mates with cable connectors 370671 and 370672)

Use the order matrix below to configure your Model EP or EL sensor order number.

E		0						D			1			
1	2	3	4	5	6	7	8	9	10	11	12	13	14	15

(2 or 3 digit-code defined by the output option selected)

SENSOR MODEL = E _ 1 - 2

EP = E-Series model EP profile-style sensor (Magnet(s) must be ordered separately)

EL = E-Series model EL low-height profile-style sensor (Magnet(s) must be ordered separately)

HOUSING STYLE = 0 3

0 = (Zero) EP and EL sensors do not have housing options or magnet types included in the standard model number. Magnets must be purchased separately by part number. Refer to *'Standard magnet selections (Models EP and EL)'* in this document for part numbers.

STROKE LENGTH = _ _ _ _ _ 4 - 8

— — — — **M** = Millimeters (Encode in 25, 50, or 100 mm increments as indicated in *'Stroke length notes'* below).

— — — . **0** **U** = Inches (Encode in 1, 2, or 4 in. increments as indicated in *'Stroke length notes'* below).

(Digit for tenths of inches is always '**0**').

Stroke Length Notes:

Stroke length ranges:
M = 50 mm to 2500 mm (up to 3000 mm for model EP Start/Stop only)
U = 2 in. to 100 in. (up to 120 in. for model EP Start/Stop only)

The increment size between standard stroke lengths vary as shown below:

Stroke length (mm)	Ordering increment
≤ 500 mm	25 mm
> 500 mm and ≤ 2500 mm	50 mm
> 2500 mm and ≤ 3000 mm (For Model EP Start/Stop only)	100 mm
Stroke length (IN)	**Ordering increment**
≤ 20 in.	1 in.
> 20 in. and ≤ 100 in.	2 in.
> 100 in. and ≤ 120 in. (For Model EP Start/Stop only)	4. in.

SENSOR CONNECTION TYPES = D _ _ 9 - 11

D34 = 5-Pin (M12), male, (Analog output)

D84 = 8-Pin (M12), male, (Start/Stop output)

INPUT VOLTAGE = 1 12

1 = + 24 Vdc (+20%, -15%), standard

OUTPUT = _ _ _ 13 - 15

(2 or 3 digit code defined by output option selected).

VOLTAGE

V01 = 0 to 10 Vdc (1 output channel with 1 magnet)

V11 = 10 to 0 Vdc (1 output channel with 1 magnet)

V02 = 0 to 10 Vdc (2 output channels with 2 magnets) Refer to 'Dual magnet outputs' for more information.

V12 = 10 to 0 Vdc (2 output channels with 2 magnets) Refer to 'Dual magnet outputs' for more information.

V03 = 0 to 10 Vdc and 10 to 0 Vdc (2 output channels with 1 magnet)

CURRENT

A01 = 4 to 20 mA (1 output channel with 1 magnet)

A11 = 20 to 4 mA (1 output channel with 1 magnet)

A02 = 4 to 20 mA (2 output channels with 2 magnets) Refer to 'Dual magnet outputs' for more information.

A12 = 20 to 4 mA (2 output channels with 2 magnets) Refer to 'Dual magnet outputs' for more information.

START/STOP

R3 = Start/Stop with sensor parameters upload function
Start/Stop output (Option **R3**) is fully compatible with the Start/Stop output (Option **R0**) used in the previous generation E-Series sensors.

Temposonics®

Magnetostrictive, Absolute, Non-contact
Linear-Position Sensors

E-Series Models EP and EL

CANopen Output

Data Sheet

Document Part Number:
551298 Revision C

E-Series
Models EP/EL

Model EP position sensor - Full Size Profile Housing
Stroke Length: 50 mm to 2500 mm (or 2 in. to 100 in.)

Model EL position sensor - Low Height Profile Housing
Stroke Length: 50 mm to 2500 mm (or 2 in. to 100 in.)

FEATURES

- Linear, Absolute Measurement
- Non-Contact Sensing Technology
- Linearity Deviation Less Than 0.02% F.S.
- Repeatability Within 0.005% F.S.
- CANopen Interface, Direct Position and Velocity Outputs
- Single or Dual Magnet Position/Velocity Measurements
- Stroke Length Range:
  - 50 mm to 2500 mm (or 2 in. to 100 in.)
- EMI Shielded and CE Certified

BENEFITS

- Rugged, Cost Effective, Precise and Durable
- Simultaneous Multi-position Measurements for 2 Magnets
- Over Voltage Protection to 36 Vdc and Polarity Protection up to -30 Vdc

APPLICATIONS

- Continuous Operation In Harsh Industrial Conditions

TYPICAL INDUSTRIES

- Factory Automation
- Woodworking and Metal Forming
- Material Handling and Packaging

Product overview

MTS Sensors continues to establish new performance standards for low-cost, fully-industrial, durable position sensors using the widely preferred magnetostrictive technology. This principle for accurate and non-contact measurement of linear-position sensing was developed 30 years ago by MTS and is used with outstanding success in a large variety of industrial applications.

The Temposonics models EP and EL sensors consists of robust aluminum profile-style housings that offer flexible mounting configurations and easy installation. Sensor models EP and EL are ideal for demanding industrial applications where simple, reliable non-contact feedback is essential.

Product specifications

Parameters	Specifications
OUTPUT	
Measured output variables:	Position, Velocity for single or dual magnets
Resolution:	**Position:** 10 µm, 20 µm **Velocity:** 1mm/s
Update times:	1.0 ms up to 2400 mm
Linearity deviation:	< ± 0.02% full stroke (minimum ± 60 µm)
Repeatability:	± 0.005% full stroke (minimum ± 10 µm)
Outputs:	**Interface:** CAN-Fieldbus System according to ISO-DIS 11898 **Data protocol:** CANopen Encoder Profile DS 406 V3.1 CiA Standard DS 301 v3.0

Baud rate, kBit/s:	800	500	250	125
Cable length, m:	< 25	< 50	< 100	< 250	< 500

Stroke length:	**Range:** 50 mm to 2500 mm (2 in. to 100 in.)

Parameters	Specifications
ELECTRONICS	
Operating voltage:	**+24 Vdc nominal:** -15% or +20%* **Polarity protection:** ≥ -30 Vdc **Over voltage protection:** ≤ 36 Vdc **Current drain:** 90 mA Typical **Dielectric withstand voltage:** 500 Vdc (DC ground to machine ground)
ENVIRONMENTAL	
Operating conditions:	**Operating temperature:** -40 °C (-40 °F) to 75 °C (167 °F) **Relative humidity:** 90% no condensation **Ingress protection:** IP 67** *(when appropriate mating connector is correctly fitted)*
EMC test:	**Electromagnetic emission:** EN 61000-6-4 *(for use in industrial environment)* **Electromagnetic immunity:** EN 61000-6-2 (The sensor meets the requirements of the EC directives and is marked with CE)
Shock rating:	100 g (single hit)/ IEC standard EN 60068-2-27
Vibration rating:	15 g/10 to 2000 Hz, IEC standard EN 60068-2-6 (resonance frequencies excluded)
WIRING	
Connection type:	5-pin (M12) male integral connector
PROFILE-STYLE SENSOR	
Electronic head:	Aluminum housing
Sensor extrusion:	Aluminum (Temposonics profile style)
Mounting:	Adjustable mounting clamps
Magnet types:	Captive-sliding magnet, block magnet or open-ring magnet (*for Model EP)*

* UL Recognition requires an approved power supply with energy limitation (UL 61010-1), or Class 2 rating according to the National Electrical Code (USA) / Canadian Electrical Code.

** The IP rating is not part of the UL Recognition.

CANopen communication and functionality

Temposonics linear-position sensors fulfill all requirements of CANbus (ISO 11898). The sensor's electronics convert the position measurements into bus oriented outputs and transfer this data directly to the controller. The CANbus interface is appropriate for serial data transfer up to 1 Mbps maximum. Sensor integrated software supports bus profile CANopen. This communication protocol allows for a comprehensive customized configuration of the sensor-bus system.

TEMPOSONICS E-SERIES SENSORS WITH CANOPEN INTERFACE

E-Series sensors with CANopen protocol are based as bus-nodes on the OSI reference model and are available with application data for single or dual-magnet measurements:

APPLICATION DATA:

- Position measurement
- Velocity measurement
- Setpoints
- Status

CANopen corresponds to encoder profile 'DS-406 V3.1 (CIA Draft standard DS-301 V3.0)'. The CANopen functionality is described below in the following communication objects.

CANopen CONFIGURATION TOOL

The EDS (Electronic Data Sheet) download is available at

www.mtssensors.com for configuration.

SERVICE DATA OBJECT (SDO)

The SDO is mainly used for sensor configuration. SDO messages are used for read and write access to all entries in the object directory.

Selectable parameters are as follows:

- Operational range setup for magnets 1 and 2
- Zero adjustmet preset for magnets 1 and 2
- 4 set points for each magnet

PROCESS DATA OBJECT (PDO)

The PDO provides data transfer of sensor measurements in up to 8-byte data blocks. The sensor uses PDO's to relay parameters for each magnet in one or two PDO's

DATA FORMATS:

- Position
- Velocity
- Limit status
- Limit status of operational range

PDO TRANSMISSION TYPES

- Asynchronous (cycle time of 1 to 65.535 ms) or synchronous
- Synchronization Object (SYNC) messages are sent from the controller to the sensor, the sensor then transmitts measurement values

SYNC OBJECT

Is responsible for synchronized bus communication

EMERGENCY OBJECT

Emergency messages are transmitted as:

- Sensor signal breakdown
- Communication fault

Dual magnet outputs

MEASUREMENT OPTIONS

E-Series sensors provide options for simultaneous multi-position measurements by using more than one magnet per sensor. When using the CANopen output, the E-Series sensor is limited to a maximum of two magnets.

For single-magnet sensors the sensor's full active stroke length is utilized by the one magnet. For example when using forward-acting outputs, the output is 0% of its value when the magnet is at the null position (start of stroke) and 100% of its value when at the edge of the dead zone (end of stroke), *(see 'Figure 1')*.

However, for dual-magnet sensors the sensor's active stroke length must be shared by the two magnets, and a separation > or = to 75 mm (3 in.) must be maintained between the two magnets (front side of the first magnet to front side of the second magnet). This minimum distance between magnets is needed to maintain proper sensor output. Therefore, for the second magnet the start of stroke (0% output) is set at 75 mm away from the sensor's null position. Likewise, for the first magnet the end of stroke (100% output) is now set 75 mm away from the edge of the dead zone *(see 'Figure 1')*.

The result of using the dual-magnet E-Series options is that the stroke length available for each magnet is 75 mm less (or 3 inches less when specifying stroke length in inches) than the sensor's full active stroke length as indicated in the model number.

When ordering the single-magnet E-Series sensor the minimum stroke length available is 50 mm or 2 inches.

However, when ordering dual magnet E-Series sensors the minimum stroke length available is 125 mm (i.e. 50 mm minimum, plus 75 mm for the minimum distance between magnets). Likewise, when specifying stroke length in inches the minimum stroke length available is 5 inches (i.e. 2 inch minimum, plus 3 inches for the minimum distance between magnets).

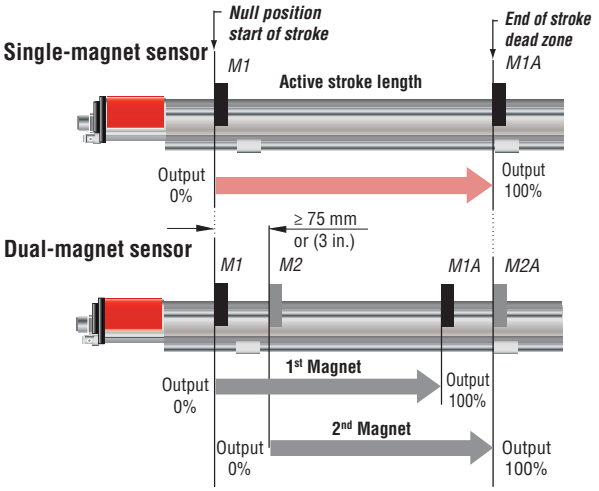

Sensor dimension references

Drawings are for reference only, contact applications engineering for tolerance specific information.

A robust aluminum extrusion forms the sensor housing containing the sensing element and electronics. The position magnet moves along the top of the profile extrusion housing.

MODEL EP

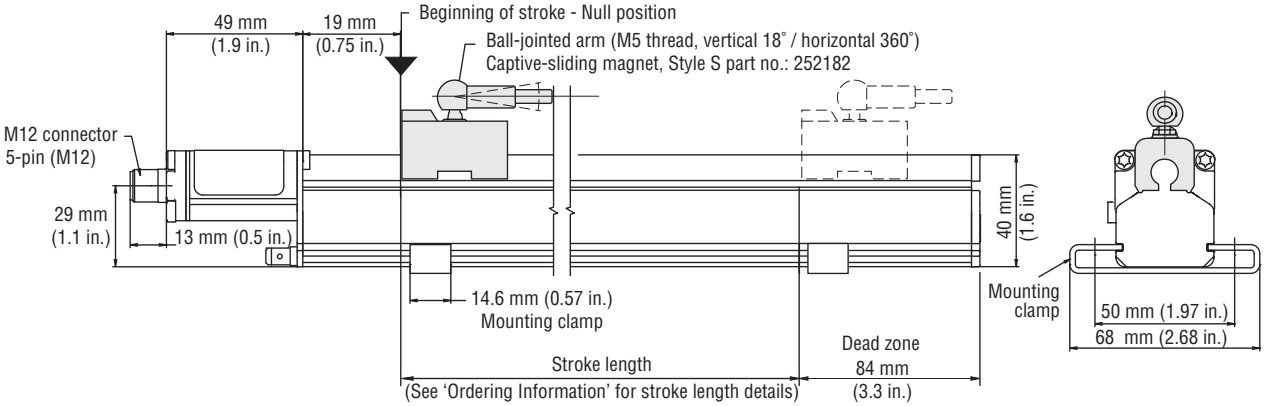

Figure 3. Figure 2. E-Series model EP sensor dimension reference (Shown with Style S captive-sliding magnet)

MODEL EL

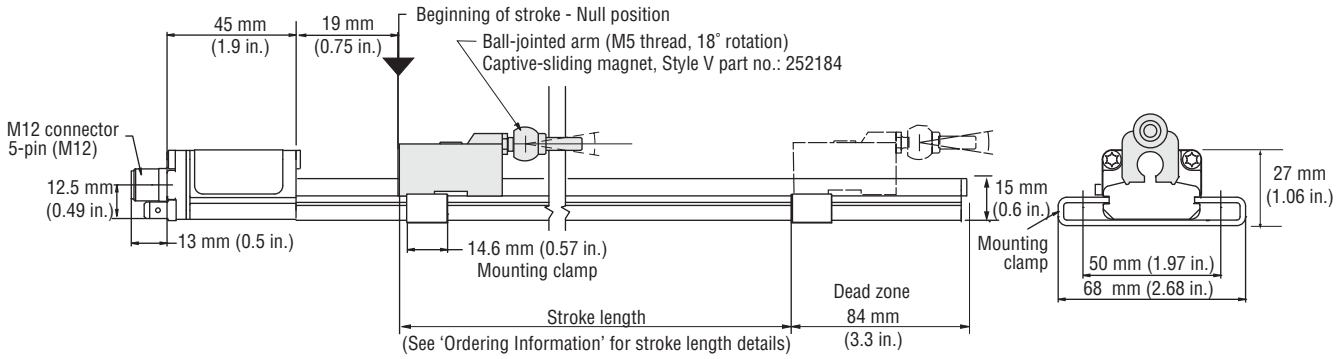

Figure 3. E-Series model EL sensor dimension reference (Shown with Style V captive-sliding magnet)

MODEL EP

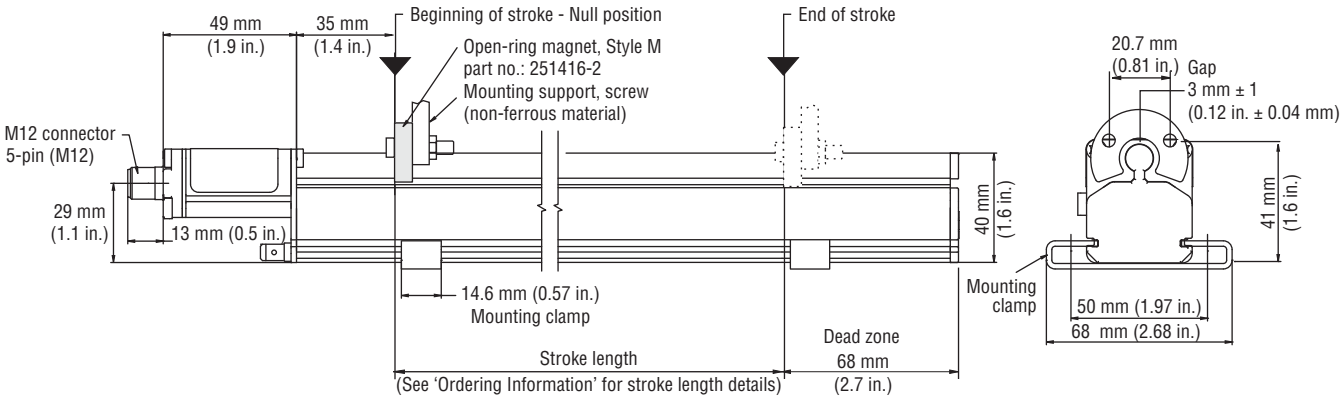

Figure 3. Figure 4. E-Series model EP sensor dimension reference (Shown with Style M open-ring magnet)

MODEL EP

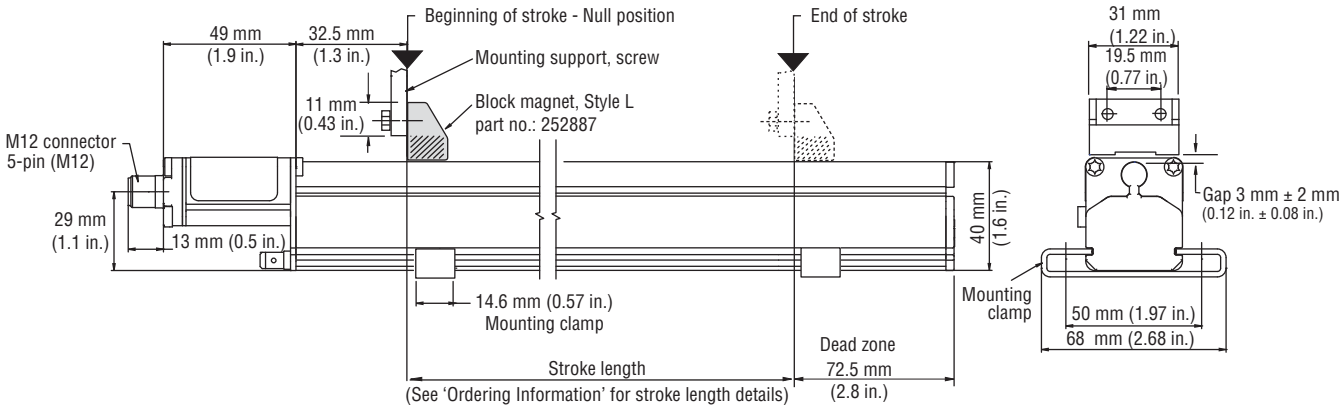

Figure 5. E-Series model EP sensor dimension reference (Shown with Style L block magnet)

Standard magnet selections, mounting and installation (Model EP and EL)

Temposonics Model EP full-size profile-style and EL low height profile-style sensors have side grooves for use with mounting clamps. The mounting clamps can be positioned along the sensor extrusion to best secure the sensor for each particular application.

Refer to the Accessories section of this catalog for magnet selections and detailed mounting and installation information.

Connections and wiring (Model EP and EL)

SENSOR INTEGRAL CONNECTOR (D34) PINOUT/WIRE COLOR CODES

The E-Series models EP and EL sensors connect directly to a controller or interface module with a male, 5-pin integral connector and an extension cable as described in *'Table 1' '*.

Attention:

The sensors aluminum housing has an anodic coating which prevents the sensor's mounting clamps from providing the appropriate grounding. A grounding lug (see 'Figure 6') is provided near the connector end of the sensor for a convenient connection to earth ground. The appropriate grounding of the cable shield is also required at the controller end.

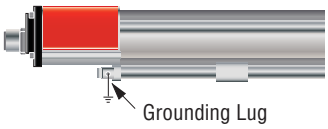

Figure 3. Figure 6. Grounding lug location.

Integral D34 connector (male) as viewed from the end of the sensor

Pin no.	Signal/function CANopen outputs
1	Shield
2	+24 Vdc
3	DC ground (for power return)
4	CAN (+)
5	CAN (-)

Integral D34 sensor connector

E		0						D	3	4	1	C		0	4			1	Z		
1	2	3	4	5	6	7	8	9	10	11	12	13	14	15	16	17	18	19	20	21	22

(Use the order matrix above to configure your Model EP or EL sensor order number)

SENSOR MODEL = E 1 - 2

EP = E-Series model EP profile-style sensor (Magnet(s) must be ordered separately)
EL = E-Series model EL low-height profile-style sensor (Magnet(s) must be ordered separately)

HOUSING STYLE = 0 3

0 = (Zero) EP and EL sensors do not have housing options or magnet types included in the standard model number. Magnets must be purchased separately by part number. Refer to *'Standard magnet selections (Models EP and EL)'* in this document for part numbers.

STROKE LENGTH = 4 - 8

_ _ _ _ **M** = Millimeters (Encode in 25 or 50 mm increments as indicated in *'Stroke length notes'* below).
_ _ _ . 0 **U** = Inches (Encode in 1or 2 in. increments as indicated in *'Stroke length notes'* below).
(Digit for tenths of inches is always '**0**').

Stroke Length Notes:

Stroke length ranges:
M = 50 mm to 2500 mm
U = 2 in. to 100 in.

The increment size between standard stroke lengths vary as shown below:

Stroke length (mm)	Ordering increment
≤ 500 mm	25 mm
> 500 mm and ≤ 2500 mm	50 mm
Stroke length (IN)	**Ordering increment**
≤ 20 in.	1 in.
> 20 in. and ≤ 100 in.	2 in.

SENSOR CONNECTION TYPES = D 3 4 9 - 11

D34 = 5-Pin (M12), male, (CANopen output)

INPUT VOLTAGE = 1 12

1 = + 24 Vdc (+20%, -15%), standard

OUTPUT = C 0 4 1 13-19

C _ _ _ _ _ _ = CANopen output - Enter the 6-digit output code (1-6) defined by the selections below:
[1] [2] [3] [4] [5] [6]

[1] [2] [3] Protocol	[4] Baud rate	[5] Resolution	[6] type
304 = CANopen 1 or 2 magnets	**1** = 1000 kBit/s	**4** = 10 µm	**1** = Standard
404 = CANopen 1 or 2 magnets with integrated bus terminator resistor (120 Ohms)	**2** = 500 kBit/s	**5** = 20 µm	
	3 = 250 kBit/s		
	4 = 125 kBit/s		

NUMBER OF MAGNETS (20-22) FOR MULTI-POSITION MEASUREMENT ONLY = Z 20-22

Z + Enter a 2-digit code
Z _ _ = Enter 02 for 2 magnets

E-Series Models EP/EL

Temposonics®

Magnetostrictive, Absolute, Non-contact
Linear-Position Sensors

E-Series Models EP and EL

Synchronous Serial Interface (SSI) Output

Data Sheet

MTS SENSORS

Document Part Number:
551299 Revision C

E-Series Models EP/EL

Model EP position sensor - Full Size Profile Housing
Stroke Length: 50 mm to 2500 mm (or 2 in. to 100 in.)

Model EL position sensor - Low Height Profile Housing
Stroke Length: 50 mm to 2500 mm (or 2 in. to 100 in.)

FEATURES

- Linear, Absolute Measurement
- Non-Contact Sensing Technology
- Linearity Deviation Less Than 0.02% F.S.
- Repeatability Within 0.005% F.S.
- SSI Provides a High-Speed Noise Immune and Cost Effective Sensor Interface
- Stroke Length Range:
  - 50 mm to 2500 mm (or 2 in. to 100 in.)
- EMI Shielded and CE Certified

BENEFITS

- Resolution Down to 20 µm
- Rugged, Cost Effective, Precise and Durable
- Direct 24/25 Bit SSI Output, Gray/Binary Formats
- Over Voltage Protection to 36 Vdc and Polarity Protection up to -30 Vdc

APPLICATIONS

- Continuous Operation In Harsh Industrial Conditions

TYPICAL INDUSTRIES

- Factory Automation
- Woodworking and Metal Forming
- Material Handling and Packaging

ISO 9001 CERTIFIED

Product overview

MTS Sensors continues to establish new performance standards for low-cost, fully-industrial, durable position sensors using the widely preferred magnetostrictive technology. This principle for accurate and non-contact measurement of linear-position sensing was developed 30 years ago by MTS and is used with outstanding success in a large variety of industrial applications.

The Temposonics models EP and EL sensors consists of robust aluminum profile-style housings that offer flexible mounting configurations and easy installation. Sensor models EP and EL are ideal for demanding industrial applications where simple, reliable non-contact feedback is essential.

Product specifications

Parameters	Specifications
OUTPUT	
Measured output variables:	Position
Resolution:	20 µm, 50 µm, 100 µm
Update rate:	
Measuring length:	300 / 750 / 1000 / 2000 mm
Measurements/Sec:	3.7 / 3.0 / 2.3 / 1.2 kHz
Linearity deviation:	< ± 0.02% full stroke (minimum ± 60 µm)
Repeatability:	± 0.005% full stroke (minimum ± 20 µm)
Outputs:	**Interface:** Synchronous Serial Interface (SSI) (RS-422 type differential signal pairs) **Data format:** Binary or gray **Data lengths:** 24 or 25 bit **Data speed (Baud rate):** 70 kBd to 1 MBd, depending on cable length (see below):
Length:	<3 / <50 / <100 / <200 / <400 m
Baud rate:	1.0 MBd / <400 kBd / <300 kBd / <200 kBd / <100 kBd
Stroke length:	**Range:** 50 mm to 2500 mm (2 in. to 100 in.)

Parameters	Specifications
ELECTRONICS	
Operating voltage:	**+24 Vdc nominal:** -15% or +20%* **Polarity protection:** ≥ -30 Vdc **Over voltage protection:** ≤ 36 Vdc **Current drain:** 90 mA **Dielectric withstand voltage:** 500 Vdc *(DC ground to machine ground)*
ENVIRONMENTAL	
Operating conditions:	**Operating temperature:** -40 °C (-40 °F) to 75 °C (167 °F) **Relative humidity:** 90% no condensation **Ingress protection:** IP 67** *(when appropriate mating connector is correctly fitted)*
EMC test:	**Electromagnetic emission:** EN 61000-6-3 **Electromagnetic immunity:** EN 61000-6-2 *The sensor meets the requirements of the EC directives and is marked with CE.*
Shock rating:	100 g (single hit)/ IEC standard EN 60068-2-27
Vibration rating:	15 g/10 to 2000 Hz, IEC standard EN 60068-2-6 *(resonance frequencies excluded)*
WIRING	
Connection type:	8-pin (M12) male integral connector
PROFILE-STYLE SENSOR	
Electronic head:	Aluminum housing
Sensor extrusion:	Aluminum (Temposonics profile style)
Mounting:	Adjustable mounting clamps
Magnet types:	Captive-sliding magnet, block magnet or Open-ring magnet (for Model EP)

* UL Recognition requires an approved power supply with energy limitation (UL 61010-1), or Class 2 rating according to the National Electrical Code (USA) / Canadian Electrical Code.

** The IP rating is not part of the UL Recognition.

Synchronous Serial Interface (SSI)

Temposonics E-Series sensors with SSI fulfill all requirements of the SSI standard for an absolute encoder. The position value is encoded in a 24/25 code format and is transmitted at high speed in SSI standard format to the control device. The main feature of SSI is the synchronized data transfer. Data transfer synchronization simplifies the closed-loop control system. A clock pulse train from a controller is used to gate out sensor data. One bit of position data is transmitted to the controller for each clock pulse received by the sensor *(see 'Figures 1 and 2')*. The absolute position data is continually updated by the sensor and converted by the shift register into serial information. *(see 'Figure 3')*.

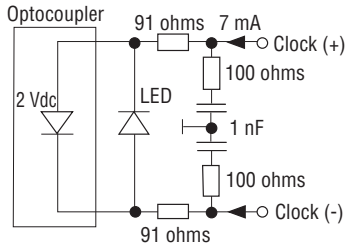

Figure 1. Sensor input

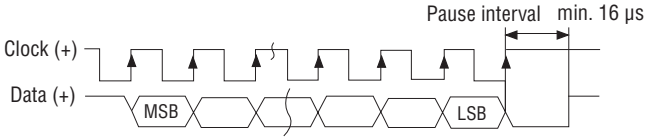

Timing Diagram

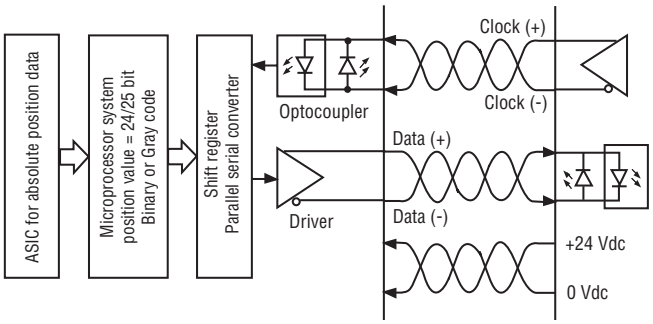

Figure 3. Logic Diagram

Sensor dimension references

Drawings are for reference only, contact applications engineering for tolerance specific information.

A robust aluminum extrusion forms the sensor housing containing the sensing element and electronics. The position magnet moves along the top of the profile extrusion housing.

MODEL EP

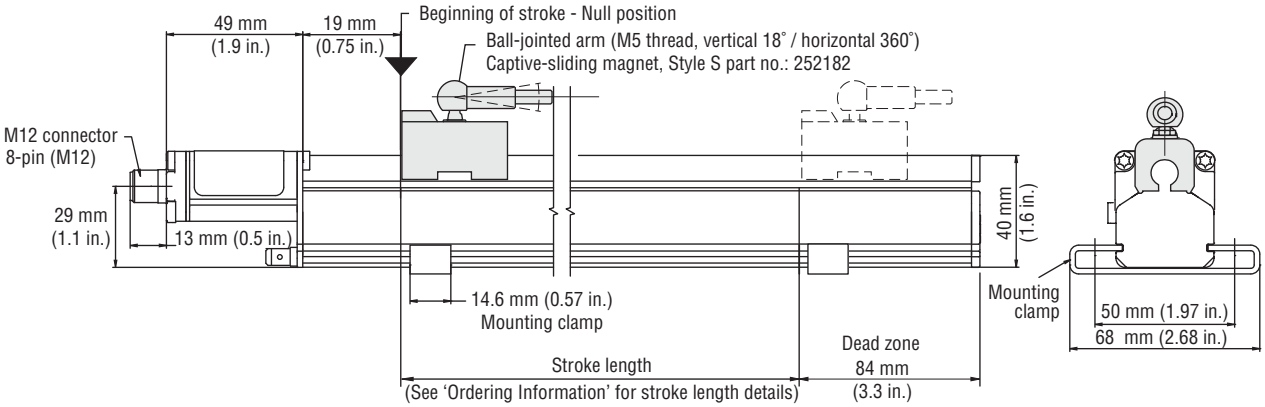

Figure 3. Figure 4. E-Series model EP sensor dimension reference (Shown with Style S captive-sliding magnet)

MODEL EL

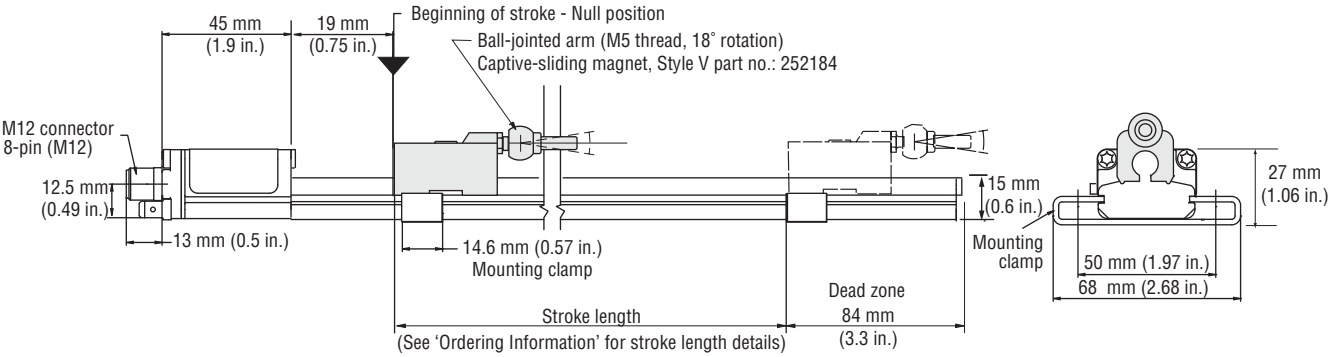

Figure 5. E-Series model EL sensor dimension reference (Shown with Style V captive-sliding magnet)

Sensor dimension references

MODEL EP

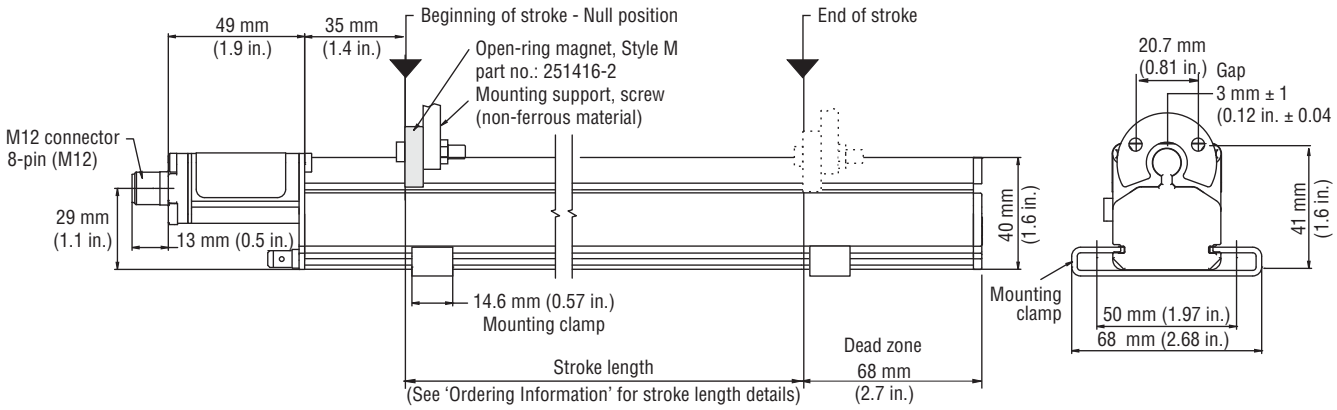

Figure 3. Figure 4. E-Series model EP sensor dimension reference (Shown with Style M open-ring magnet)

MODEL EP

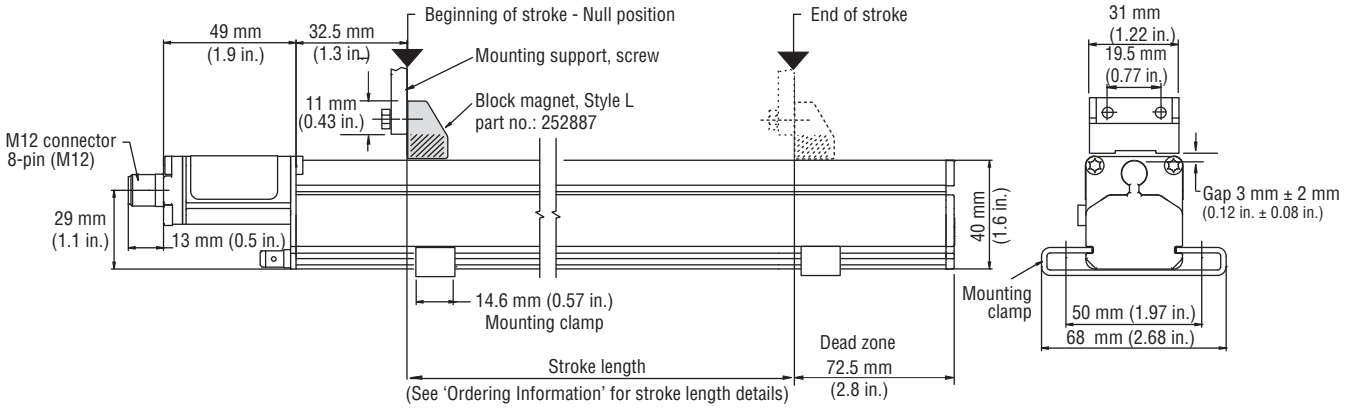

Standard magnet selections, mounting and installation (Model EP and EL)

Temposonics Model EP full-size profile-style and EL low height profile-style sensors have side grooves for use with mounting clamps. The mounting clamps can be positioned along the sensor extrusion to best secure the sensor for each particular application.

Refer to the Accessories section of this catalog for magnet selections and detailed mounting and installation information.

Connections and wiring (Model EP and EL)

SENSOR INTEGRAL CONNECTOR (D84) PINOUT/WIRE COLOR CODES

The E-Series models EP and EL sensors connect directly to a controller or interface module with a male, 8-pin integral connector and an extension cable as described in *'Table 1'*.

Attention:

The sensors aluminum housing has an anodic coating which prevents the sensor's mounting clamps from providing the appropriate grounding. A grounding lug (see 'Figure 6') is provided near the connector end of the sensor for a convenient connection to earth ground. The appropriate grounding of the cable shield is also required at the controller end.

Integral D84 connector (male) as viewed from the end of the sensor

Pin no.	Extension cable wire color	Signal/function Start/Stop outputs
1	White	Clock (+)
2	Brown	Clock (-)
3	Green	Data (+)
4	Yellow	Data (-)
5	Gray	No connection
6	Pink	No connection
7	Blue	+24 Vdc
8	Red	DC ground (for power return)

Table 1. Integral D84 sensor connector

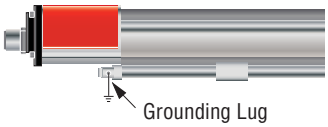

Figure 3. Figure 6. Grounding lug location.

E-Series Models EP and EL Sensors, SSI Output
Ordering Information

E		0						D	8	4	1	S				1	0	0
1	2	3	4	5	6	7	8	9	10	11	12	13	14	15	16	17	18	19

(Use the order matrix above to configure your Model EP or EL sensor order number)

SENSOR MODEL = E 1 - 2

EP = E-Series model EP profile-style sensor (Magnet(s) must be ordered separately)

EL = E-Series model EL low-height profile-style sensor (Magnet(s) must be ordered separately)

HOUSING STYLE = 0 3

0 = (Zero) EP and EL sensors do not have housing options or magnet types included in the standard model number. Magnets must be purchased separately by part number. Refer to *'Standard magnet selections (Models EP and EL)'* in this document for part numbers.

STROKE LENGTH = 4 - 8

_ _ _ _ **M** = Millimeters (Encode in 25 or 50 mm increments as indicated in *'Stroke length notes'* below).

_ _ _ . **0** **U** = Inches (Encode in 1 or 2 in. increments as indicated in *'Stroke length notes'* below). (Digit for tenths of inches is always '**0**').

Stroke Length Notes:

Stroke length ranges:
M = 50 mm to 2500 mm
U = 2 in. to 100 in.

The increment size between standard stroke lengths vary as shown below:

Stroke length (mm)	Ordering increment
≤ 500 mm	25 mm
> 500 mm and ≤ 2500 mm	50 mm
Stroke length (IN)	**Ordering increment**
≤ 20 in.	1 in.
> 20 in. and ≤ 100 in.	2 in.

SENSOR CONNECTION TYPES = D 8 4 9 - 11

D84 = 8-Pin (M12), male, (SSI output)

INPUT VOLTAGE = 1 12

1 = + 24 Vdc (+20%, -15%), standard

OUTPUT = S 1 0 0 13-19

S _ _ _ _ _ _ = SSI output - Enter the 6-digit output code (1-6) defined by the selections below:

[1] [2] [3] [4] [5] [6]

[14] Data length
- **1** = 25 bits
- **2** 24 bits

[15] Output format
- **B** = Binary
- **G** = Gray code

[16] Resolution
- **3** = 0.05 mm
- **4** = 0.1 mm
- **5** = 0.02 mm

[17] Performance
- **1** = Standard

[18] [19] Signal options (scale orientation)
- **00** = Measuring direction forward, async

Temposonics®

Magnetostrictive, Absolute, Non-contact
Linear-Position Sensors

E-Series Model ER

Analog and Start/Stop Outputs

Data Sheet

Document Part Number:
550996 Revision F

Model ER position sensor-
Stroke Length: 50 mm to 1500 mm (2 in. to 60 in.)

E-Series Model ER

FEATURES

- Linear, Absolute Measurement
- Non-Contact Sensing Technology
- Linearity Deviation Less Than 0.02% F.S.
- Repeatability Within 0.005% F.S.
- Two Outputs Available:
  - Analog (Voltage/Current) Forward or Reverse Acting
  - Start/Stop Outputs
- Simple Sensor Parameter Upload (for Start/Stop)
- Stroke Length Range: 50 mm to 1500 mm (2 in. to 60 in.)
- Internal Electronics are Sealed for IP67 Ingress Protection
- EMI Shielded and CE Certified

BENEFITS

- Rugged, Cost Effective, Precise and Durable Non-wear Alternative to Linear Potentiometers
- Extendable and Retractable Dual Rod Ends
- The Magnet is Contained and Protected Inside The Sensor Housing
- Over Voltage Protection to 36 Vdc and Polarity Protection up to -30 Vdc

APPLICATIONS

- Continuous Operation In Harsh Industrial Conditions

TYPICAL INDUSTRIES

- Factory Automation
- Woodworking and Metal Forming
- Material Handling and Packaging

Product overview

MTS Sensors continues to establish new performance standards for low-cost, fully-industrial, durable position sensors using the widely preferred magnetostrictive technology. This principle for accurate and non-contact measurement of linear-position sensing was developed 30 years ago by MTS and is used with outstanding success in a large variety of industrial applications. The innovative Temposonics model ER sensor brings proven benefits of magnetostrictive feedback to the versatile rod-and-cylinder sensor package.

It is ideal for demanding industrial applications where high performance non-contact feedback is essential for maximum productivity and overall reliability. The model ER sensor's rod-and-cylinder design has a rod that can extend from the sensor housing. As the rod is extended and retracted, the sensing magnet remains completely contained and protected at all times, ensuring reliable sensor performance in the toughest industrial environments.

Product specifications

Parameters	Specifications
OUTPUT	
Measured output variables:	Position
Resolution:	**Analog:** Infinite (restricted by output ripple) **Start/Stop:** 0.1, 0.01 and 0.005 mm (controller dependent)
Linearity deviation:	< ± 0.02% full stroke (minimum ± 60 µm)
Repeatability:	< ± 0.005% full stroke (minimum ± 20 µm)
Outputs:	**Analog (voltage or current)** **Voltage:** 0 to 10 Vdc and 10 to 0 Vdc or **Two outputs:** 0 to 10 Vdc and 10 to 0 Vdc (controller input resistance RL ≥ 5k Ohm) **Current:** 4 to 20 mA or 20 to 4 mA (Controller input resistance RL ≤ 500 Ohm) **Digital-pulse (Start/Stop):** RS-422 differential signal Serial parameter upload available for: Measuring range, offset, gradient, status and manufacturer number
Stroke length:	**Range:** 50 mm to 1500 mm (2 in. to 60 in.)
ELECTRONICS	
Operating voltage:	**+24 Vdc nominal:** -15% or +20%* **Polarity protection:** up to -30 Vdc **Over voltage protection:** up to 36 Vdc **Current drain:** Analog: 50 - 140 mA Start/Stop: 50 - 100 mA *(Stroke length dependent)* **Dielectric withstand voltage:** 500 Vdc (DC ground to machine ground)

Parameters	Specifications
ENVIRONMENTAL	
Operating conditions:	**Operating temperature:** -40 °C (-40 °F) to 75 °C (167 °F) **Relative humidity:** 90% no condensation **Ingress protection:** IP 67** *(when mating connector is correctly fitted)*
EMC test:	**Electromagnetic emission:** EN 61000-6-4 **Electromagnetic susceptibility:** EN 61000-6-2. This sensor meets the requirements of the EC directives and is marked with CE.
Shock rating:	100 g (single hit)/ IEC standard EN 60068-2-27
Vibration rating:	10 g/10 to 2000 Hz, IEC standard EN 60068-2-6 (resonance frequencies excluded)
WIRING	
Connection types:	**Analog output:** 5-pin (M12) male integral connector **Start/Stop output:** 8-pin (M12) male integral connector
ROD-AND-CYLINDER STYLE SENSOR	
Sensor rod:	Aluminum
Sensor housing:	Aluminum
Mounting options:	Adjustable mounting clamps or dual rod ends

* UL Recognition requires an approved power supply with energy limitation (UL 61010-1), or Class 2 rating according to the National Electrical Code (USA) / Canadian Electrical Code.

** The IP rating is not part of the UL Recognition.

Outputs

ANALOG (VOLTAGE/CURRENT) OUTPUTS

Analog outputs include voltage (0 to 10 Vdc forward or reverse acting), and current (4 to 20 mA forward or reverse acting). Since the outputs are direct, no signal conditioning electronics are needed when interfacing with controllers or meters *(see 'Figure 1')*.

Analog output voltages ranges:

- 0 to 10 Vdc
- 10 to 0 Vdc
- 0 to 10 Vdc and 10 to 0 Vdc
- 4 to 20 mA
- 20 to 4 mA

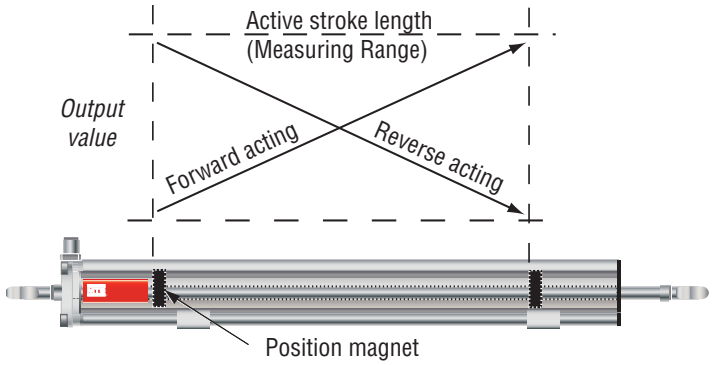

Figure 1. Analog Output signals

DIGITAL START/STOP OUTPUT

The Temposonics E-Series Model ER Start/Stop output sensors require a start signal from a controller or interface module to initiate the measurement cycle. The sensor generates a stop signal at the end of the measurement cycle that is used to stop the controller's counter clock.

The elapsed time between the Start and Stop signals is directly proportional to the magnet's position along the active stroke length. The controller can calculate the absolute position of the magnet from the time value and the sensor's unique gradient value (inverse of the speed for the sonic pulse traveling in the sensor's waveguide). *(see 'Figure 2')*.

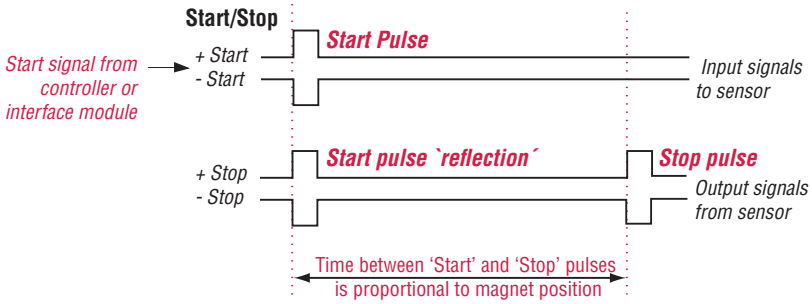

Figure 2. Start/Stop output signals (RS-422 differential pairs)

Communication

SENSOR PARAMETER UPLOAD FEATURE

For applications using smart sensor interfaces, the Model ER sensor with Start/Stop output *(Option **R3**)* comes with the ability to perform sensor parameter uploads. This feature replaces the task of entering sensor data manually, saving time and preventing possible entry errors during start-up or for system maintenance.

Note: Start/Stop output (option R3)

When the sensor parameter upload feature is not activated the Start/Stop output (Option **R3**) remains fully compatible with the Start/Stop output (Option **R0**) used in the previous generation E-Series sensor family.

The upload feature supports the following sensor parameters:

- Measuring range
- Offset
- Gradient - (Shown as speed of the sonic-strain pulse (m/s) or inverse speed (µs/in.)
- Status
- Manufacturer number

The sensor's specific parameters can be retrieved by the controller and interface module at any time, via the sensor's Start/Stop signal lines.

The sensor parameter upload feature requires a customer supplied RS-422 interface. The data format is serial, 4800 Baud, 8-bit data length. Please contact the factory for additional parameter upload protocol details.

Model ER rod-and-cylinder sensor dimension references

Drawings are for reference only, contact applications engineering for tolerance specific information.

A robust aluminum extrusion forms the sensor housing containing the sensor rod, magnet, sensing element and electronics. The permanent magnet is mounted on a sliding carrier attached to the end of the rod. As the rod moves in and out, the magnet travels above the sensing element inside the sensor housing.

MODEL ER ROD-AND-CYLINDER SENSOR

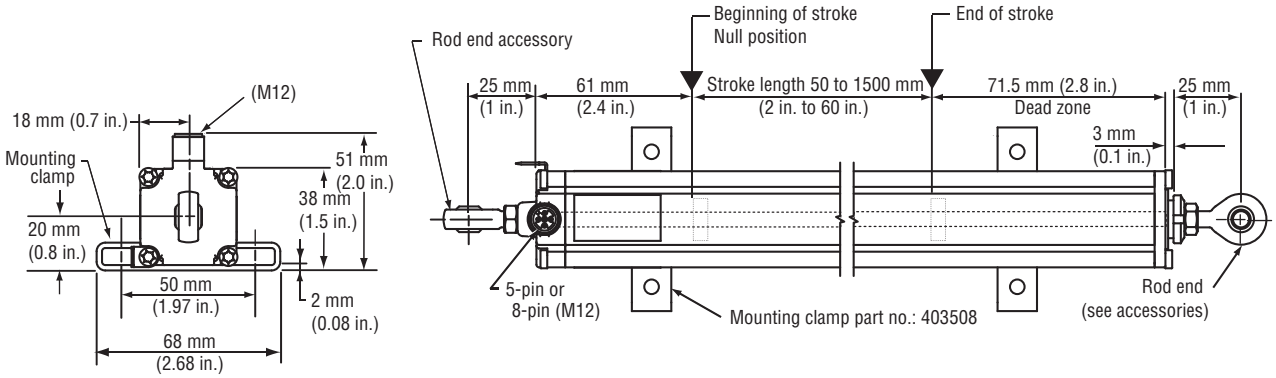

Figure 3. E-Series model ER rod-and cylinder sensor dimension reference

Connections and wiring (Model ER)

SENSOR INTEGRAL CONNECTOR (D34 AND D84) PINOUT/WIRE COLOR CODES

The E-Series model ER sensor connects directly to a controller or interface module with the standard male, 5-pin or 8-pin integral connector and an extension cable as described in *'Table 1'* and *'Table 2' below*.

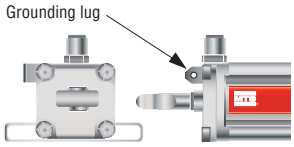

Figure 4. Grounding lug location.

Attention:

The sensors aluminum housing has an anodic coating which prevents the sensor's mounting clamps from providing the appropriate grounding. A grounding lug (see 'Figure 4') is provided near the connector end of the sensor for a convenient connection to earth ground. The appropriate grounding of the cable shield is also required at the controller end.

Integral D34 connector (male) as viewed from the end of the sensor

Pin no.	Extension Cable Wire color	Signal/Function Analog outputs
1	Brown	+24 Vdc
2	White	Output signal
3	Blue	DC ground (for power return)
4	Black	2nd Output signal (optional)
5	Gray	Ground for signal return

Table 1. Integral D34 sensor connector (mates with cable connectors 370618 and 370619)

Integral D84 connector (male) as viewed from the end of the sensor

Pin no.	Extension cable wire color	Signal/function Start/Stop outputs
1	White	(+) Start
2	Brown	(-) Start
3	Green	(+) Stop
4	Yellow	(-) Stop
5	Gray	No connection
6	Pink	No connection
7	Blue	+24 Vdc
8	Red	DC ground (for power return)

Table 2. Integral D84 sensor connector (mates with cable connectors 370671 and 370672)

Use the order matrix below to configure your Model ER sensor order number.

E	R							D			1			
1	2	3	4	5	6	7	8	9	10	11	12	13	14	15
												2 or 3 digit code		

SENSOR MODEL = E R — 1 - 2

ER = E-Series model ER position sensor

HOUSING STYLE = ☐ — 3

S = Inside thread 1/4 - 28 at end of rod

M = Inside thread M6 at end of rod

STROKE LENGTH = ☐☐☐☐☐ — 4 - 8

— — — — **M** = Millimeters (Encode in 25 or 50 mm increments) as indicated in *'Stroke length notes'* below.

— — — . **0** **U** = Inches (Encode in 1 or 2 in. increments) as indicated in *'Stroke length notes'* below. (Digit for tenths of inches is always '**0**')

Stroke length Notes:

Stroke length ranges:
M = 50 to 1500 mm (Preferred stroke lengths are: 75,100, 150, 200, 300, 400, 500, 600, 750, 1000 and 1250 mm)
U = 2 to 60 in. (Preferred stroke lengths are: 3, 6, 9,12, 15, 18, 21, 24, 30, 36, 42, 48 and 54 in.)
The increment size between standard stroke lengths vary as shown below:

Stroke length (mm)	Ordering increment
≤ 500 mm	25 mm
> 500 mm and ≤ 1500 mm	50 mm
Stroke length (IN)	**Ordering increment**
≤ 22 in.	1 in.
> 22 in. and ≤ 60 in.	2 in.

SENSOR CONNECTION TYPES = D ☐☐ — 9 - 11

D34 = 5-Pin (M12), male, (Analog output)

D84 = 8-Pin (M12), male, (Start/Stop output)

INPUT VOLTAGE = 1 — 12

1 = + 24 Vdc (+20%, -15%), standard

OUTPUT (2 or 3 digit code defined by output option selected below) = ☐☐☐ — 13 - 15

VOLTAGE

V01 = 0 to 10 Vdc

V11 = 10 to 0 Vdc

V03 = 0 to 10 Vdc and 10 to 0 Vdc (2 output channels)

CURRENT

A01 = 4 to 20 mA

A11 = 20 to 4 mA

START/STOP

R3 = Start/Stop with sensor parameters upload function
Start/Stop output (Option **R3**) is fully compatible with the Start/Stop output (Option **R0**) used in the previous generation E-Series sensors.

E-Series Model ER

Temposonics®

Magnetostrictive, Absolute, Non-contact
Linear-Position Sensors

E-Series Model EE Embedded Sensor

Analog Output

Data Sheet

Document Part Number:
551334 Revision A

Model EE Embeddable Position Sensor
Stroke Length: 50 mm to 2500 mm (2 in. to 100 in.)

FEATURES

- Linear, Absolute Measurement
- Non-Contact Sensing Technology
- Linearity Less Than 0.02% F.S.
- Repeatability Less Than 0.002% F.S.
- Direct Analog Output:
  - 4 to 20 mA or 20 to 4 mA
  - Min/max. load 0/500 Ohms
- Stroke Length Range: 50 mm to 2500 mm (or 2 in. to 100 in.)

BENEFITS

- Compact Design for Embedded Cylinder Applications
- Continuous Absolute Position Measurement
- Over Voltage Protection to 36 Vdc and Polarity Protection up to -30 Vdc
- Increased Operating Temperature

APPLICATIONS

- Space Limited Cylinder Applications
- Embedded Continuous Position Measurement

TYPICAL INDUSTRIES

- Industrial Applications
- Fluid Power

Product overview

The Temposonics® E-Series embedded (EE) position sensor is designed to be embedded into a hydraulic cylinder. The compact sensor design makes the embeddable E-Series the perfect solution for small cylinders with limited space for the integration of a measuring system. The increased temperature range allows an operation of the sensor in high temperature industrial applications.

MTS Sensors continues to establish new performance standards for low-cost, fully-industrial, durable position sensors using the widely preferred magnetostrictive technology. This principle for accurate and non-contact measurement of linear-position sensing was developed 30 years ago by MTS and is used with outstanding success in a large variety of industrial applications.

Product specifications

Parameters	Specifications
OUTPUT	
Measured output variable:	Position
Resolution:	**Analog:** Infinite (restricted by output ripple)
Linearity deviation:	< ± 0.02% full stroke (minimum ± 60 µm)
Repeatability:	< ± 0.002% full stroke (minimum ± 20 µm)
Output:	**Direct Analog / Current:** 4 to 20 mA or 20 to 4 mA (Controller input resisdtance: RL ≤ 500 Ohms)
Stroke length:	**Range:** 50 mm to 2500 mm (or 2 to 100 in.)
Update Time:	≤ 3 kHz(Stroke length dependent)
ELECTRONICS	
Operating voltage:	**+24 Vdc nominal:** -15% or +20% **Polarity protection:** up to -30 Vdc **Over voltage protection:** up to 36 Vdc **Current drain:** 50 to 140 mA

Parameters	Specifications
ENVIRONMENTAL	
Operating conditions:	**Operating temperature:** -40 °C (-40 °F) to +85 °C (185 °F) **Relative humidity:** 90% no condensation **Ingress protection:** IP67 (With professionally mounted housing and connectors.) IP30 (Sensor with flat connector)
EMC test:	**Electromagnetic emission:** EN 55011, cl. B:2009 + A1:2010 **Electromagnetic immunity:** EN 61326-1:2006
Shock rating:	100 g (single shock) IEC-Standard 60068-2-27
Vibration rating:	15 g / 10 to 2000 Hz IEC-Standard 60068-2-6 (resonance frequencies excluded)
WIRING	
Connection types:	6-Pin Molex connector
ROD-STYLE SENSOR (MODEL EE)	
Electronic head:	Stainless Steel 1.4301 / AISI 304
Sensor rod:	Stainless Steel 1.4301 / AISI 304 **10 mm rod:** 350 bar static, 530 bar peak (5000 psi static, 7700 psi peak)
Mounting:	Any orientation. According to installation conditions.
Magnet types:	Ring magnet

Outputs

ANALOG (CURRENT) OUTPUT

The direct analog output range is 4 to 20 mA or 20 to 4 mA. Since the outputs are direct, no signal conditioning electronics are needed when interfacing with controllers or meters.

Analog output ranges:

- 4 to 20 mA
- 20 to 4 mA

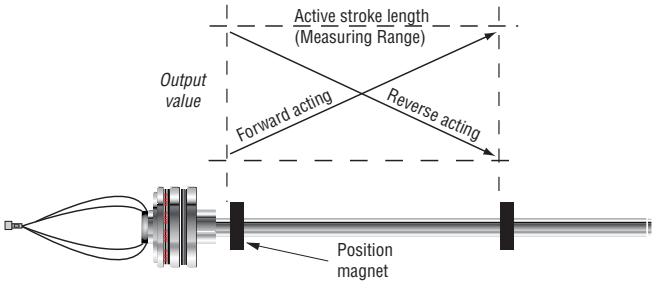

Figure 1. Analog Output signals

Sensor dimension references

Drawings are for reference only, contact applications engineering for tolerance specific information.

MODEL EE

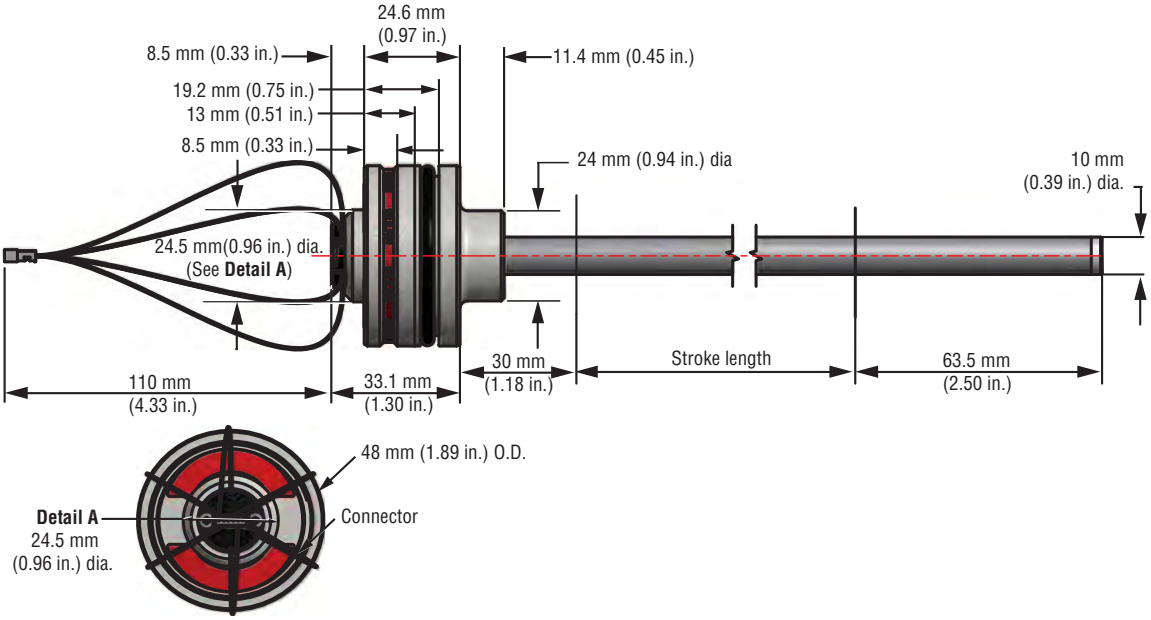

Figure 3. E-Series Model EE Sensor Component dimension reference

E-Series Model EE

Standard magnet options (Model EE)

Magnets must be ordered separately with Model EE position sensors.

Refer to the Accessories section of this catalog for magnet selections and detailed mounting and installation information.

Connections and wiring (Model EE)

MOLEX MATING CONNECTOR CABLE (M12) 5-PIN AND 6-PIN PINOUT/WIRING INFORMATION

The E-Series Model EE Sensor Component connects directly to a controller or interface module with the standard male, 5-pin or 6-pin connector and an extension cable as described in *'Table 1'*

Analog (M12) 5-pin connector (male) as viewed from the face of the sensor plug

5-Pin connector	Molex Pin no.:	(M12) Pin no.:	Signal/function Analog outputs
	6	1	+24 Vdc
	3	2	Output signal
	4	3	DC ground (for power return)
	1	4	n.c.
	5	5	Ground for signal return
	2	-	n.c.

M12 connector cable part no.: 254256

CABLE CONNECTOR OPTIONS FOR 5-PIN (M12) CONNECTOR TYPES *(Photo and drawing dimensions are for reference only)*

Connector and dimensions	Description	Part number
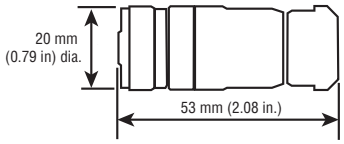	**Female cable connector, straight exit (Field installable)** 5-Pin (M12) Mates with 5-pin (M12) connector cable part no.: 254256 **Sensor component output:** Analog **Termination:** Screw terminals **Cable gland:** for 4-8 mm dia. cable **Ingress protection:** IP 67	370677
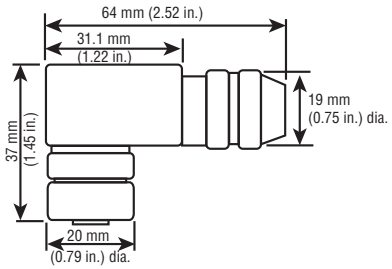	**Female cable connector, 90° exit (Field installable)** 5-Pin (M12) Mates with 5-pin (M12) connector cable part no.: 254256 **Sensor component output:** Analog **Termination:** Screw terminals **Cable gland:** for 6 mm dia. cable **Ingress protection:** IP 67	370678

MATING CABLE CONNECTOR SELECTIONS

(Drawing dimensions are for reference only)

Connector and dimensions	Description	Part number
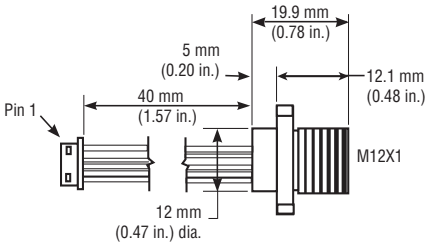	**Mating cable connector** 5-Pin (M12)	254256
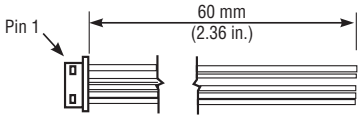	**Pigtail mating connector**	254266

MATING CABLE CONNECTOR SELECTION

(Drawing dimensions are for reference only)

Connector and dimensions	Description	Part number
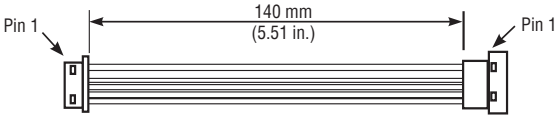	**Extension cable, Molex to Molex**	254243

E-Series Model EE

E-Series Model EE Embedded Sensor, Analog Output
Ordering Information

Use the order matrix below to configure your Model EE sensor order number.

E	E	S						M	0	0	1			
1	2	3	4	5	6	7	8	9	10	11	12	13	14	15

SENSOR MODEL = E E — 1 - 2

EE = E-Series Model EE rod-style sensor (Magnet must be ordered separately)

ROD HOUSING AND FLANGE TYPE = S — 3

S = Pressure fit housing, 10 mm OD rod

STROKE LENGTH = ☐☐☐☐☐ — 4 - 8

— — — — M = Millimeters (Encode in 5, 10, 25 or 50 mm increments) as indicated in *'Stroke length notes'* below.

— — — . — U = Inches (Encode in 0.2, 0.5, 1 or 2 in. increments) as indicated in *'Stroke length notes'* below.

Stroke length Notes:

Stroke length ranges:
M = 50 mm to 2500 mm
U = 2 in. to 100 in.

The increment size between standard stroke lengths vary as shown below:

Stroke length (mm)	Ordering increment
≤ 500 mm	5 mm
> 500 mm and ≤ 750 mm	10 mm
> 750 mm and ≤ 1000 mm	25 mm
> 1000 mm and ≤ 2500 mm	50 mm
Stroke length (in.)	**Ordering increment**
≤ 20 in.	0.2 in.
> 20 in. and ≤ 30 in.	0.5 in.
> 30 in. and ≤ 40 in.	1 in.
> 40 in. and ≤ 100 in.	2 in.

SENSOR CONNECTION TYPE = M 0 0 — 9 - 11

M00 = 6-Pin Molex, male

INPUT VOLTAGE = 1 — 12

1 = + 24 Vdc (+20%, -15%), standard

OUTPUT CURRENT = ☐☐☐ — 13 - 15

A01 = 4 to 20 mA

A11 = 20 to 4 mA

E-Series Model EE

Temposonics®

Magnetostrictive, Absolute, Non-contact
Linear-Position Sensor Accessories

Includes Installation, Mounting and Application References

Current Production and Retrofit Options for
R-Series, G-Series and E-Series Sensors

MTS® SENSORS

Document Part Number
550929 Revision E

Industrial Product Accessories

Contents

Mounting & installation reference, Models RH, RF, RD4 ... 162
Mounting & Installation reference, Models GH and GT 163
Mounting & Installation reference, Models RP and GP 164
Mounting & Installation reference, Models EH/EP/EL 165
Mounting & Installation reference, Models ER and EP2..... 166
Magnet selections 167
Extension cable length limitations.....171
Extension cable with 6-pin (D60) connector options 172
Extension cable with connector options, RP/RH-Profibus .. 173
Extension cable with connector options RP/RH-SSI 174
Extension cable with 10-pin connector options 175
Connector and bus cables, Industrial Ethernet 176
Connector and bus cables assemblies (M12) cord sets..... 177
Adapter cable retrofit options 178
Connectors 182
Connectors (retrofit) legacy sensor models 188
Pressure pipe 189
Installation hardware 190
Sensor programming; tools and kits..... 194

Model RH Rod-Style sensor mounting

The position magnet requires minimum distances away from ferrous metals to allow proper sensor output. The minimum distance from the front of the magnet to the cylinder end cap is 15 mm (0.6 in.).

The minimum distance from the back of the magnet to the piston head is 3.2 mm (0.125 in.). However, a minimum distance of at least 5 mm (0.197 in.) is preferred for added performance margin. The non-ferrous spacer (part no.: 400633) provides this minimum distance when used along with the standard ring magnet (part no.: 201542-2), as shown in 'Figure 1'.

For applicable magnet selections, refer to *'Magnet Selections'.*

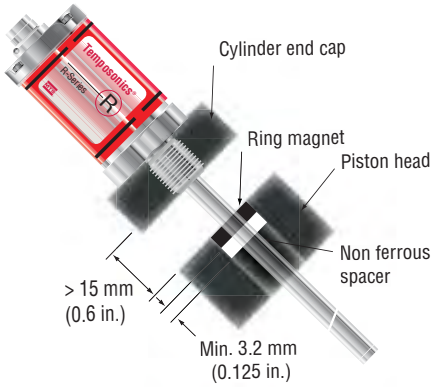

Figure 1. Model RH rod-style mounting

MODEL RH CYLINDER INSTALLATION

When used for direct-stroke measurement in fluid cylinders, the sensor's high pressure, stainless steel rod installs into a bore in the piston head/rod assembly as illustrated. This method guarantees a long-life and trouble-free operation.

The sensor cartridge can be removed from the flange and rod housing while still installed in the cylinder. This procedure allows quick and easy sensor cartridge replacement, without the loss of hydraulic pressure.

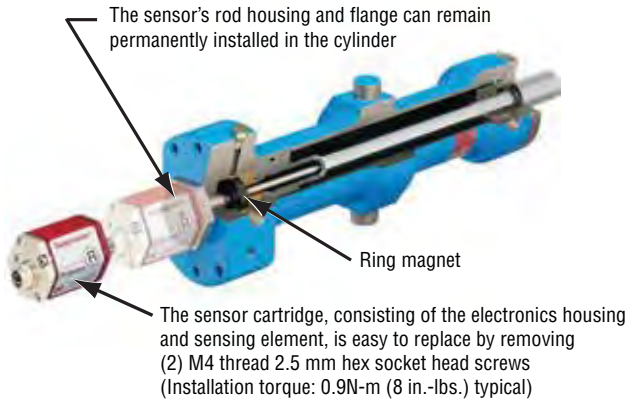

Figure 3. Fluid cylinder installation

Model GH rod-style sensor mounting

The position magnet requires minimum distances away from ferrous metals to allow proper sensor output. The minimum distance from the front of the magnet to the cylinder end cap is 15 mm (0.6 in.).

The minimum distance from the back of the magnet to the piston head is 3.2 mm (0.125 in.). However, a minimum distance of at least 5 mm (0.197 in.) is preferred for added performance margin.The non-ferrous spacer (part no.: 400633) provides this minimum distance when used along with the standard ring magnet (part no.: 201542-2), as shown in 'Figure 3'.

For applicable magnet selections, refer to *'Magnet Selections'*.

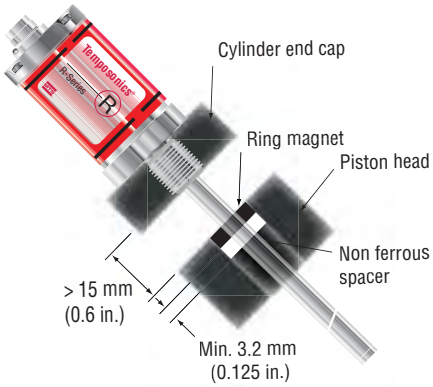

Figure 3. Model GH rod-style mounting

MODEL GH CYLINDER INSTALLATION

When used for direct-stroke measurement in fluid cylinders, the sensor's high pressure, stainless steel rod installs into a bore in the piston head/rod assembly *(See 'Figure 4')*. This method guarantees a long-life and trouble-free operation.

The sensor cartridge can be removed from the flange and rod housing while still installed in the cylinder. This procedure allows quick and easy sensor cartridge replacement, without the loss of hydraulic pressure.

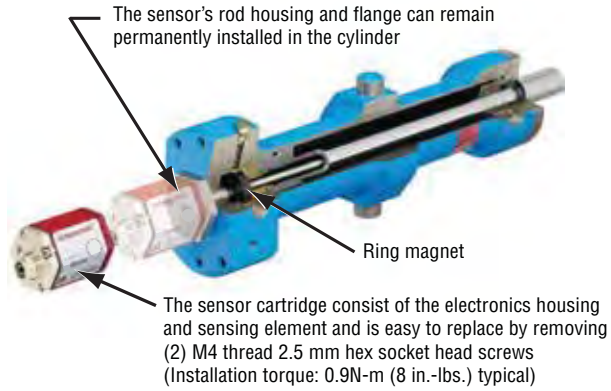

Figure 4. Fluid cylinder installation

Models GT2/GT3 rod-style sensor mounting

The position magnet requires minimum distances away from ferrous metals to allow proper sensor output. The minimum distance from the front of the magnet to the cylinder end cap is 15 mm (0.6 in.).

The minimum distance from the back of the magnet to the piston head is 3.2 mm (0.125 in.). However, a minimum distance of at least 5 mm (0.197 in.) is preferred for added performance margin. The non-ferrous spacer (part no.: 400633) provides this minimum distance when used along with the standard ring magnet (part no.: 201542-2), as shown in 'Figure 5'.

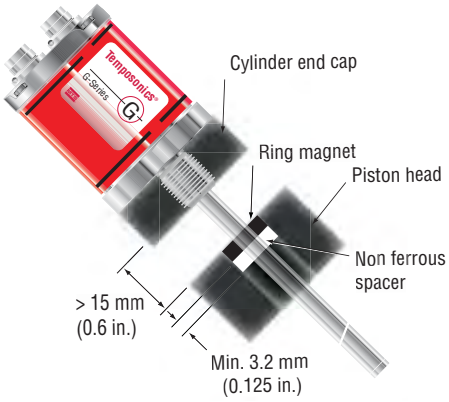

For applicable magnet selections, refer to *'Magnet Selections'*.

Figure 5. Models GT2/GT3 rod-style mounting

MODELS GT2/GT3 CYLINDER INSTALLATION

When used for direct-stroke measurement in fluid cylinders, the sensor's high pressure, stainless steel rod installs into a bore in the piston head/rod assembly *(See 'Figure 6')*. This method guarantees a long-life and trouble-free operation.

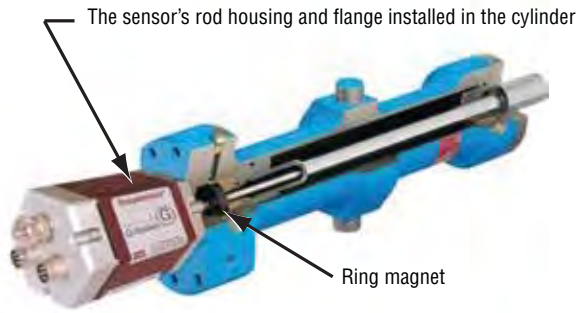

Figure 6. Fluid cylinder installation example

Note:

Unlike the G-Series Model GH sensor (shown in figure 4), GT2/GT3 redundant sensor models do not have a replaceable sensor cartridge feature.

Models RP and GP sensor mounting references

PROFILE-STYLE SENSOR MOUNTING

Temposonics models RP and GP profile-style sensors offer two basic mounting methods; side grooves for use with mounting feet or a bottom groove that accepts a special T-Slot nut (part no.: 401602). Both the mounting feet and T-Slot nuts can be positioned along the sensor extrusion to best secure the sensor for each particular application.

Notes:

1. Models RP and GP sensors include two mounting feet, (part no. 400802) for sensors stroke lengths up to 1250 mm (50 in.)
2. One additional mounting foot is included for stroke lengths over 1250 mm (50 in.) and for each additional 500 mm (20 in.), thereafter.
3. MTS recommends using 10-32 cap screws (customer supplied) at a maximum torque of 44 in. lbs. when fastening mounting feet.
4. The T-Slot nut (part no.: 401602) requires a ***customer supplied*** M5 threaded stud and nut.

For applicable magnet selections, refer to *'Magnet Selections'*.

Models RP and GP profile-style sensor mounting and installation references

T-Slot nut (M5 threaded)

Nut for mounting model RP and GP sensors.

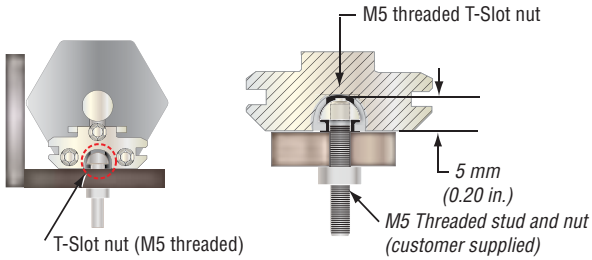

Mounting feet and screws

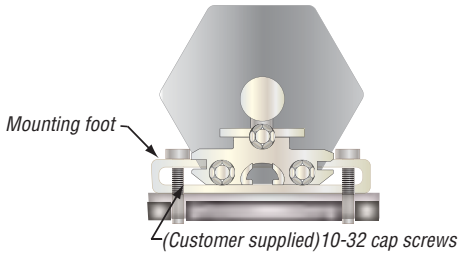

Models RP and GP sensor mounting and installation accessory reference	Description	Part number
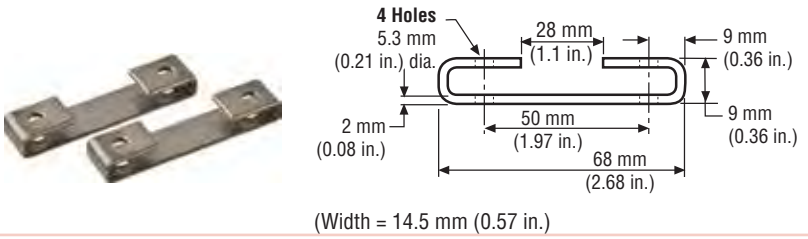 (Width = 14.5 mm (0.57 in.)	**Mounting feet, standard (304 SS)** Profile-style sensor mounting for sensor models RP and GP	400802
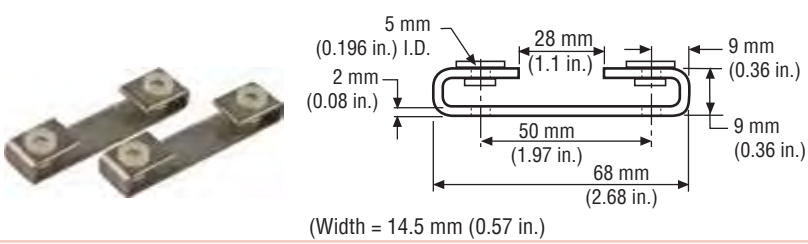 (Width = 14.5 mm (0.57 in.)	**Mounting feet, Insulated (304 SS)** Profile-style sensor mounting for sensor models RP and GP. Nylon washers and cloth tape on the bottom provide electrical isolation.	252004
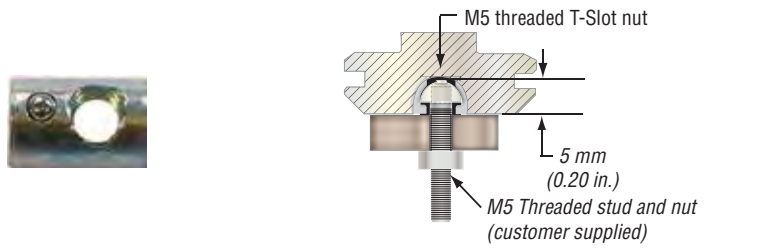	**T-Slot nut (M5 threaded)** Nut for mounting model RP and GP sensors.	401602

Model EH Rod-Style sensor mounting

MODEL EH SENSOR MOUNTING

The model EH sensor is designed for direct stroke measurement inside prepared hydraulic cylinders. At the head of the sensor, a threaded flange and O-Ring provides for mounting and sealing the sensor into a port opening in the cylinder end cap. The sensor's pressure resistant rod fits into a bore drilled through the center of the piston head and rod assembly. The sensor's position magnet is mounted on the top of the piston head or installed in a shallow counter-bore inside the piston head.

The position magnet requires minimum distances away from ferrous metals to allow proper sensor output. The minimum distance from the front of the magnet to the cylinder end cap is 15 mm (0.6 in.).

The minimum distance from the back of the magnet to the piston head is 3.2 mm (0.125 in.). However, a minimum distance of at least 5 mm (0.197 in.) is preferred for performance margin. The non-ferrous spacer (part no. 400633), provides this minimum distance when used along with the standard ring magnet (part no. 201542-2), as shown in *'Figure 7'*.

The magnet is usually secured using non-ferrous fastening material (customer supplied). Screws must be made of nonmagnetic stainless steel or brass. In the event that a ferrous circlip or retaining ring will be used to secure the magnet in a counter-bore then an additional non-ferrous spacer (> or = 3.2 mm) must be placed between the circlip or retaining ring and the front side of the magnet.

The cylinder's design ratings for hydraulic pressure and piston velocity will determine the appropriate size for the bore that is drilled through the center of the piston head and rod assembly. The recommended minimum size for this bore is 10 mm (0.39 in.) when using the 7 mm (0.27 in.) diameter sensor rod.

Likewise, the recommended minimum size of 13 mm (0.51 in.) should be used when installing the 10 mm diameter sensor rod. Some applications using long sensor rods may benefit by adding a bushing (e.g. made of flourelastomer material) to prevent wear on the magnet and sensor rod (customer supplied).

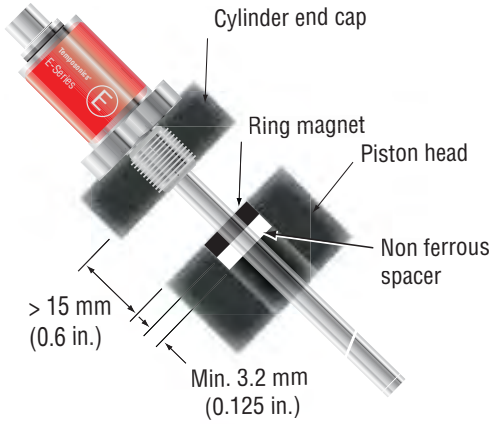

Figure 7. Model EH rod-style mounting

Sensor mounting (Models EP and EL)

SENSOR MOUNTING CLAMPS

E-Series models EP and EL sensors are mounted onto the machine with moveable mounting clamps. Mounting clamps slide into side grooves and should be evenly distributed along the sensor extrusion to best secure the sensor for each particular application.

Notes:

1. Models EP and EL sensors include two mounting clamps, (part number 403508), for stroke lengths up to 1250 mm (50 in.). One additional mounting clamp is included for stroke lengths over 1250 mm (50 in.) and for each additional 500 mm (20 in.) thereafter.
2. MTS recommends using 10-32 cap screws (customer supplied) at a maximum torque of 44 in. lbs. when fastening mounting clamps.

Models EP and EL sensor mounting and installation reference	Mounting method	Part number
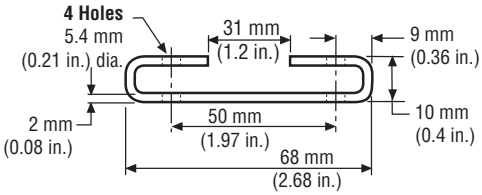 ***Mounting clamp width:*** *14.6 mm (0.57 in.)*	**Mounting clamp** Sensor mounting for sensor models EP and EL	403508
Model EP mounting 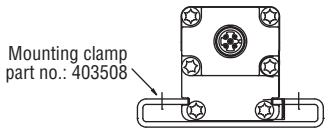 *Model EL mounting* 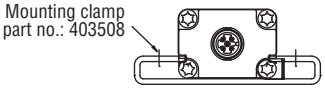	**Mounting configuration using mounting clamp and screws**	*Mounting clamp, part number 403508*

Sensor mounting (Model ER)

SENSOR MOUNTING CLAMPS

The E-Series model ER sensor is mounted onto the machine with moveable mounting clamps. Grooves for mounting clamps are available on three sides of the sensor housing, allowing versatile mounting orientations for the sensor's connector and extension cable. The rod is then attached to the moving machine part. Optional rod ends can be used to simplify sensor installation design and facilitate articulated motion sensing. Using dual rod ends the model ER sensor can be mounted between two independent moving points, such as swinging door applications. Please note for model ER sensors having stroke lengths over 750 mm (30 in.) only the first 90% of the stroke length can be used for articulated type applications when the weight of the sensor is supported only by rod ends.

Notes:

1. Mounting clamps are ordered separately. Two mounting clamps, (part number 403508) are required for stroke lengths up to 750 mm (30 in.). A least one additional mounting clamp is required for longer stroke lengths.
2. MTS recommends using 10-32 cap screws (customer supplied) at a maximum torque of 44 in. lbs. when fastening mounting clamps.

Model ER sensor mounting and installation reference	Mounting method	Part number
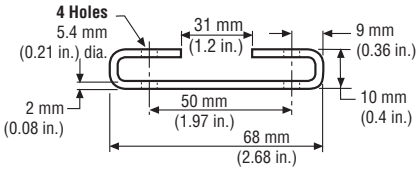 ***Mounting clamp width:*** *14.6 mm (0.57 in.)*	**Mounting clamp** Sensor mounting for sensor model ER	403508
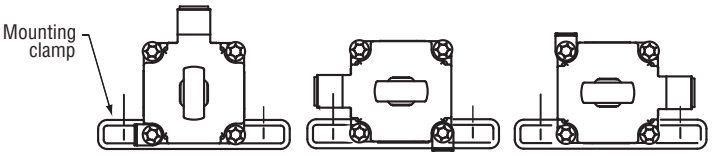	**Three possible mounting configuration using mounting clamp and screws**	*Mounting clamp, part number 403508*

Sensor mounting

MODEL EP2 SENSOR MOUNTING

Temposonics model EP2 profile-style sensors are mounted onto a flat straight surface of the machine with moveable mounting feet. A pair (2) mounting feet are provided with each sensor. Two additional mounting feet (part no. 400802) are included for measurement stroke lengths greater than 48 inches. Mounting feet slide into side grooves and should be evenly distributed along the sensor extrusion to best secure the sensor for each particular application.

Notes:

1. Additional mounting feet can be ordered separately.
2. MTS recommends using 10-32 cap screws (customer supplied) at a maximum torque of 44 in. lbs. when fastening mounting feet.

Profile-Style sensor mounting and installation reference	Mounting method	Part number
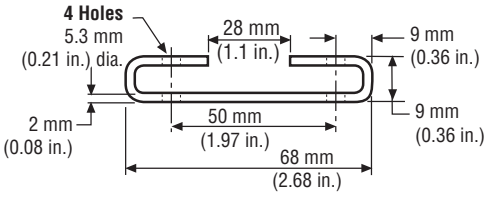	**Mounting feet, standard (304 SS)** Profile-style sensor mounting for sensor model EP2 (Width = 14.5 mm (0.57 in.)	400802
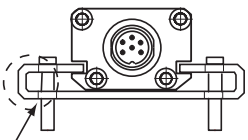 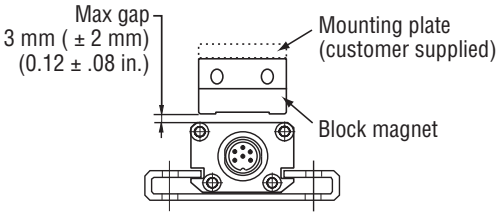	**Mounting feet and screws** Profile-style sensor foot installation *Secure mounting feet with customer supplied 10-32 Cap screws.* *(recommended)* **Block magnet, Style L mounting** Magnet installs on a mounting plate (customer supplied) or flat surface of the machine's moving part.	*Mounting feet , part number 400802* *Block magnet, style L part number 252887*

Magnet selections

The standard ring magnet (part number 201542-2) is suitable for most applications.

POSITION MAGNET SELECTIONS (Magnet must be ordered separately) *(Drawing dimensions are for reference only)*

Magnet and magnet dimensions	Description and specifications	Sensor model reference			Part number
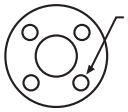	**Standard ring magnet** **Material:** Composite PA ferrite GF20 **I.D.:** 13.5 mm (0.53 in.) **O.D.:** 33 mm (1.3 in.) **Thickness:** 8 mm (0.3 in.) **Weight:** Approx.. 14g **Operating temperature:** - 40 °C to +100 °C	RH RF RD4	GH GT	EH EE	201542-2
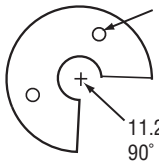	**Large open-ring magnet** **Material:** PA 66-GF30 Magnet slugs potted with epoxy. **I.D.:** 15.9 mm (0.625 in.) **O.D.:** 63.25 mm (2.49 in.) **Thickness:** 9.5 mm (0.375 in.) **Weight:** Approx. 26g **Operating temperature:** - 40 °C to +75 °C	RH RF RD4	GH GT	EH	201553
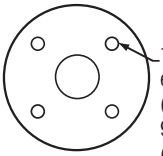	**Large ring magnet** **Material:** PA 66-GF30 Magnet slugs potted with epoxy. **I.D.:** 19.05 mm (0.75 in.) **O.D.:** 63.25 mm (2.49 in.) **Thickness:** 9.3 mm (0.375 in.) **Weight:** Approx. 35g **Operating temperature:** - 40 °C to +75 °C	RH RF RD4	GH GT	EH EE	201554
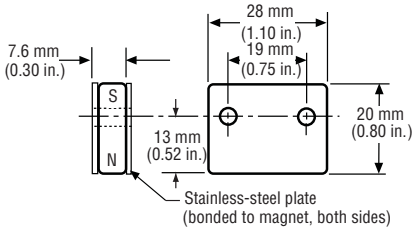	**Bar magnet, Style L** **Material:** Stainless-steel plate bonded to both magnet sides. Magnet installs on a mounting plate (customer supplied) or flat surface of the machine's moving part. This magnet may influence the sensor performance specifications for some applications.	RH RP RF RD4	GH GP GT	EP EH EL	251298-2
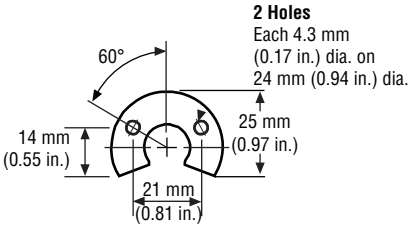	**Open-ring magnet, Style M** **Material:** Composite PA ferrite GF20 **I.D.:** 13.5 mm (0.53 in.) **O.D.:** 33 mm (1.3 in.) **Thickness:** 8 mm (0.3 in.) **Weight:** Approx. 11g **Operating temperature:** - 40 °C to +100 °C This magnet may influence the sensor performance specifications for some applications.	RH RF RD4 RP	GH GT GP	EP EH EL	251416-2

POSITION MAGNET SELECTIONS (Magnet must be ordered separately) *(Drawing dimensions are for reference only)*

Magnet and magnet dimensions	Description and specifications	Sensor model reference			Part number
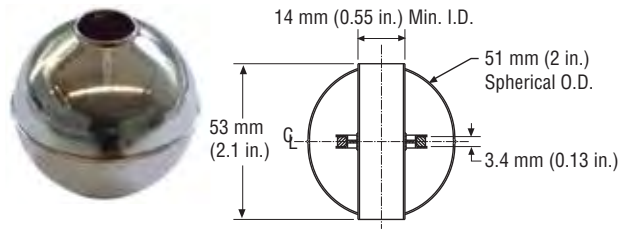	**Magnet float** **(Level sensing applications)** **Material:** Stainless steel **Weight:** Approx. 42 ± 3g **Density:** 720 kg/m3 **Specific gravity:** 0.70 maximum **Pressure:** 870 psi maximum *(This float is used with Rod-style sensors for hydraulic fluid or fresh water applications only)*	RH RD4	GH GT	EH	251447
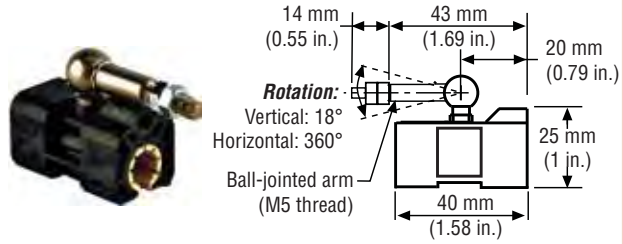	**Captive-sliding magnet, Style S** **Material:** GFK, magnet hard ferrite **Weight:** Approx. 30g **Operating temperature:** -40 °C to +75 °C	RP	GP	EP EL	252182
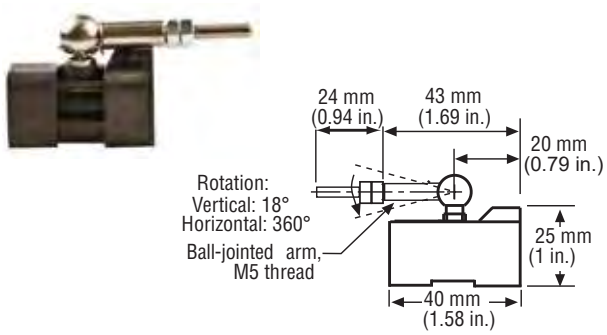	**Captive-sliding magnet, Style N with longer ball-jointed arm** **Material:** GFK, magnet hard ferrite **Weight:** Approx. 30g **Operating temperature:** -40 °C to +75 °C	RP	GP	EP EL	252183
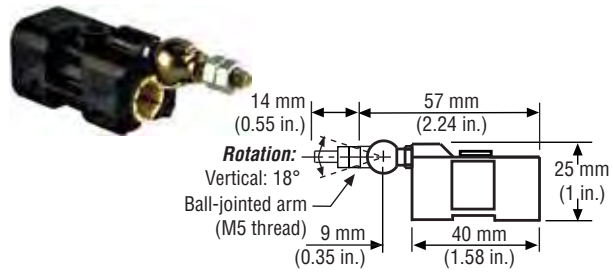	**Captive-sliding magnet, Style V** **Material:** GFK, magnet hard ferrite **Weight:** Approx. 30g **Operating temperature:** -40 °C to +75 °C	RP	GP	EP EL	252184
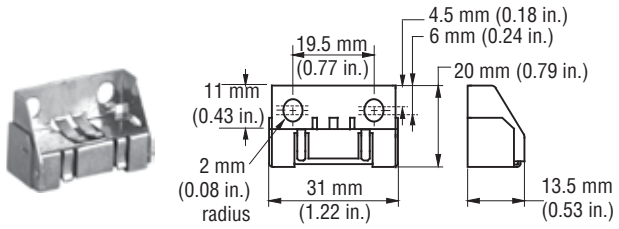	**Block magnet, Style L** **Material:** Magnet hard ferrite with stainless -steel carrier **Weight:** Approx. 20g ± 2g **Operating temperature:** -40 °C to +100 °C This magnet may influence the sensor performance specifications for some applications.	RP RH RD4 RF	GH GP GT	EP EP2 EL EH	252887

Magnet Selections

POSITION MAGNET SELECTIONS (Magnet must be ordered separately) *(Drawing dimensions are for reference only)*

Magnet and magnet dimensions	Description and specifications	Sensor model reference			Part number
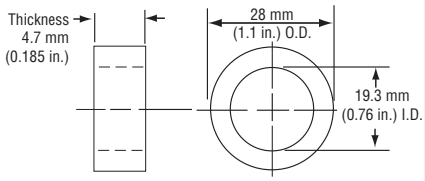	**Large Ring magnet** **Material:** Composite PA ferrite GF20 **I.D.:** 19.3 mm (0.76 in.) **O.D.:** 28 mm (1.1 in.) **Thickness:** 4.7 mm (0.185 in.) **Weight:** Approx. 6g **Operating temperature:** - 40 °C to +100 °C	RF RH RD4	GH GT	EH EE	400424 Replaces 401467
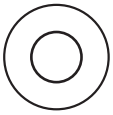	**Small ring magnet** **Material:** PA ferrite coated **Weight:** Approx. 10g **I.D.:** 13.5 mm (0.53 in.) **O.D.:** 25.4 mm (1 in.) **Thickness:** 8 mm (0.3 in.) **Operating temperature:** - 40 °C to +100 °C	RH RF RD4	GH GT	EH EE	400533
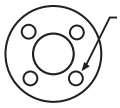 **4 Holes** Each 4.3 mm (0.17 in.) dia. 90° apart on 24 mm (0.94 in.) dia.	**Magnet spacer (Non-ferrous, use with ring magnet part no.: 201542-2)** **I.D.:** 14 mm (0.56 in.) **O.D.:** 32 mm (1.25 in.) **Thickness:** 3.2 mm (0.125 in.)	RH RD4	GH GT	EH EE	400633
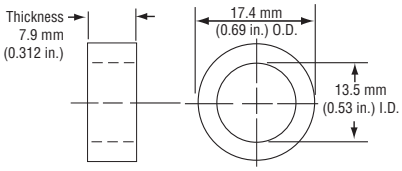	**Small ring magnet** **Material:** PA surface coated **Weight:** Approx. 5g **I.D.:** 13.5 mm (0.53 in.) **O.D.:** 17.4 mm (0.69 in.) **Thickness:** 7.9 mm (0.312 in.) **Operating temperature:** - 40 °C to +100 °C	RH RD4	GH GT	EH EE	401032
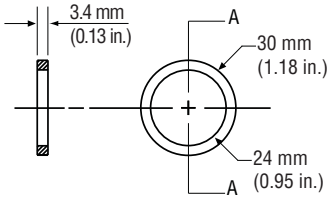	**Large ring magnet** **Material:** PA ferrite **Weight:** Approx. 10g **I.D.:** 24 mm (0.95 in.) **O.D.:** 30 mm (1.18 in.) **Thickness:** 3.4 mm (0.13 in.) **Operating temperature:** - 40 °C to +100 °C Contact applications engineering for handling guidelines				401467 Replaced with 400424
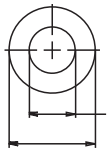 12 mm (0.47 in.) I.D. 17.4 mm (0.69 in.) O.D.	**Ring magnet** **(Use with Model EH sensors having a 7 mm O.D. rod)** **I.D.:** 12 mm (0.47 in.) **O.D.:** 17.4 mm (0.69 in.) **Thickness:** 10.5 mm (0.41 in.) **Operating temperature:** - 40 °C to +100 °C			EH 7 mm O.D. pipe	253572

Magnet Selections

POSITION MAGNET SELECTIONS (Magnet must be ordered separately) *(Drawing dimensions are for reference only)*

Magnet and magnet dimensions	Description and specifications	Sensor model reference			Part number
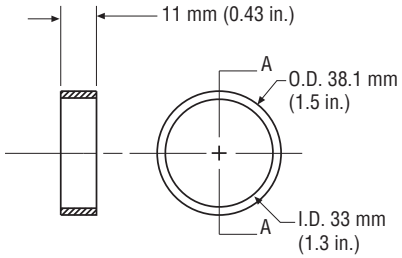	**Large ring magnet** **Material:** PA ferrite **Weight:** Approx. 10g **I.D.:** 33 mm (1.3 in.) **O.D.:** 38.1 mm (1.5 in.) **Thickness:** 3.4 mm (0.13 in.) **Operating temperature:** - 40 °C to +100 °C Contact applications engineering for handling guidelines	RH RF RD4	GH GT	EH EE	401468
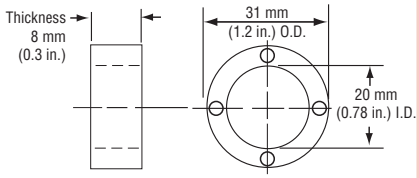	**Ring magnet** **Material:** **Weight:** **I.D.:** 19.8 mm (0.78 in.) **O.D.:** 31 mm (1.2 in.) **Thickness:** 8 mm (0.3 in.)	RH RF RD4	GH GT	EH EE	402316
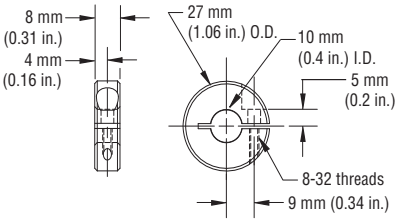	**Collar** Provides end of stroke stops for magnet float (part no.: 251447)	RH RD4	GH GT	EH	560777
	System magnet Material: composite POM Weight: 14 g Operating temperature: -40…+75 °C Surface pressure: 20 N/mm²	RH RD4	GH GT	EH EE	253928
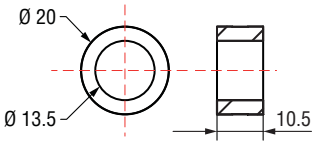	**Multipole magnet** Material: composite neobonded Weight: 8.5 g Operating temperature: -40…+75 °C Surface pressure: 20 N/mm²	RH RD4	GH GT	EH EE	254012
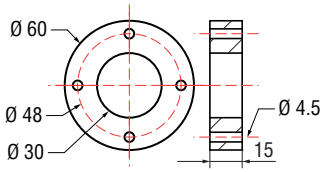	**Ring magnet OD60** Material: Al CuMgPb, Magnets compound-filled; Weight: ca. 90 g Operating temperature: -40…+75 °C Surface pressure: 20 N/mm² Fastening torque for M4 screws: max. 1 Nm	RH RD4 RF	GH GT	EH	MT0162
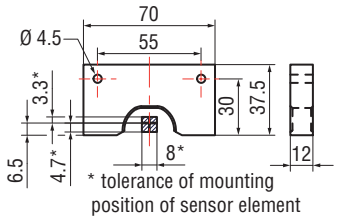	**U-magnet** Material: AlMg4.5Mn, black anodised; magnets compound-filled Weight: 125 g Operating temperature: -40…+75 °C Fastening torque for M4 screws: max. 4 Nm This magnet may influence the sensor performance specifications for some applications.	RH RF RP	GH GP	EH EP	252185

Notes:

If your application requires a magnet that is not shown, contact the Factory and consult Applications Engineering for custom or additional non-standard magnet options.

Cable length limitations (bus and serial communications industry standards)

Please apply good industry practices for long cable runs. Cables must be kept away from high-power AC lines and all motor drive cables.

R-SERIES SENSORS

SSI	CANbus	DeviceNet	Profibus	Baud rate	Maximum cable or bus length	
●				1.0 MBd	10 ft.	3 m
●				400 kBd	160 ft.	50 m
●				300 kBd	320 ft.	100 m
●				200 kBd	650 ft.	200 m
●				100 kBd	1300 ft.	400 m
	●			1.0 MBd	80 ft.	25 m
	●			500 kBd	320 ft.	100 m
	●			250 kBd	820 ft.	250 m
	●			125 kBd	1640 ft.	500 m
		●		500 kBd	420 ft.	130 m
		●		250 kBd	800 ft.	270 m
		●		125 kBd	1730 ft.	530 m
			●	12 MBd	330 ft.	100 m
			●	1.5 MBd	650 ft.	200 m
			●	500 kBd	1300 ft.	400 m
			●	187.5 kBd	3280 ft.	1000 m
			●	≤ 93.75 kBd	3940 ft.	1200 m

G-SERIES SENSORS

Analog (Voltage/Current) Outputs	Digital (PWM or Start/Stop) Outputs	Neuter (Start/Stop) Output	Maximum Cable Length	
●			150 ft.	45 m
	●		300 ft. Δ	90 m
		●	250 ft. †	75 m

Δ 300 ft.. maximum when using the ± differential pair for the interrogation or **Start** signal and for the gate or **Stop** signal.

† 250 ft. maximum when using the single-ended interrogation or **Start** signal. The unused differential signal **MUST** be terminated to ground at the control box.

EXTENSION CABLE OPTION AND SENSOR MODEL COMPATIBILITY REFERENCE

Extension Cable with Connection types	R-Series	G-Series	E-Series
Standard 6-pin (D60)	**Analog, CANbus**	**Analog, Digital-pulse**	
6-pin (D63)	**Profibus**		
7-pin DIN (D70)	**SSI**		
10-pin MS (MS0)	**SSI**	**Analog, Digital-pulse**	
Continued on next page			

Extension Cable with Connector / Ordering Information
D6 (D60) Connection Type Options

Extension Cable with Connection types	R-Series	G-Series	E-Series
5-pin M12 (D54)	CANbus		
5-pin M12 (D53)	Profibus		
4-pin M12 (D56)	EtherCAT, EtherNet/IP		
5-pin M12 (D34)			Analog
8-pin M12 (D84)			Digital-pulse

EXTENSION CABLE WITH CONNECTORS FOR D6 (D60) CONNECTION TYPES (R-SERIES AND G-SERIES SENSORS)

Extension Cable and Connector	Description	Connection type
	Female Connector, Straight Exit with Standard PVC Jacket Cable *(Assembly Includes D6 Connector, Part No.: 560700 and Cable, Part No.:530026)*	D6
	Female Connector, 90° Exit with Standard PVC Jacket Cable *(Assembly Includes D6 Connector, Part No.: 560778 and Cable, Part No.:530026)*	DA
	Female Connector, Straight Exit with Black Polyurethane Jacket Cable (for higher resistance to moisture, oil and cold temperatures) *(Assembly Includes D6 Connector, Part No.: 370423 and Cable, Part No.:530052)*	DJ
	Female Connector, 90° Exit with Black Polyurethane Jacket Cable (for higher resistance to moisture, oil and cold temperatures) *(Assembly Includes D6 Connector, Part No.: 560778 and Cable, Part No.:530052)*	DK

Ordering Information
Extension Cable with Connector for D6 (D60) Connection Types

D							
1	2	3	4	5	6	7	8

SENSOR CONNECTION TYPES = D _ **1 - 2**

D6 = Female connector, straight exit (part no. 560700), and PVC jacket cable (part no. 530026)
DA = Female connector, 90° exit (part no. 560778), and PVC jacket cable (part no. 530026)
DJ = Female connector, straight exit (part no. 560700), and black polyurethane jacket cable (part no. 530052)
DK = Female connector, 90° exit (part no. 560778), and black polyurethane jacket cable (part no. 530052)

CABLE LENGTHS = _ _ _ **3 - 5**

For standard length cables up to 100 ft.

005 = 5 ft.
015 = 15 ft.
025 = 25 ft.
050 = 50 ft.
100 = 100 ft.

For custom length cables over 100 ft.

_ _ _ = Cable length (maximum cable length is dependent on the output selected; consult MTS Applications Engineering)

CABLE TERMINATION = _ _ _ **6 - 8**

P0 = Pigtail cable without connector (2 digit code)
D6M = D6 male connector (straight exit). Only available with the **D6** option above.
D6F = D6 female connector (straight exit). Only available with the **D6** option above.
DAF = D6 female connector (90° exit). Only available with the **DA** option above.

EXTENSION CABLE WITH CONNECTORS FOR R-SERIES PROFIBUS SENSORS WITH (D63) CONNECTION TYPES

Extension cable and connector assemblies	Description	Connection type
	Hybrid Profibus Bus Cable, straight exit, 6-pin DIN female connector, with PG9 strain relief for (D63) sensor connection types *(Assembly Includes D63 Connector, Part no.: 370423 and Cable, Part no.:530040)*	DF
	Hybrid Profibus Bus Cable, 90° exit, 6-pin DIN female connector with PG9 strain relief for (D63) sensor connection types *(Assembly Includes D63 Connector, Part no.: 560778 and Cable, Part no.:530040)*	DG

ORDERING INFORMATION - EXTENSION CABLE WITH CONNECTORS FOR R-SERIES PROFIBUS SENSORS WITH (D63) CONNECTION TYPES

D							
1	2	3	4	5	6	7	8

SENSOR CONNECTION TYPES = D _ (1 - 2)

DF = Female connector, straight exit (part no. 370423), and Profibus cable *(part no.: 530040) with (D63) type connector*
DG = Female connector, 90° exit (part no. 560778), and Profibus cable *(part no.: 530040)* with (D63) type connector

CABLE LENGTHS = _ _ _ (3 - 5)

For standard length cables up to 100 ft.

005 = 5 ft.
015 = 15 ft.
025 = 25 ft.
050 = 50 ft.
100 = 100 ft.

For custom length cables over 100 ft.

— — — = Cable length (maximum cable length is dependent on baud rate).

CABLE TERMINATION = _ _ _ (6 - 8)

P0 = Pigtail cable without connector (2-digit code)
DFM = Male connector, (Straight exit). For daisy-chain connections of Profibus sensors with D63 connector.
DGM = Male connector, (90° exit). For daisy-chain connections of Profibus sensors with D63 connector.

EXTENSION CABLE WITH CONNECTORS FOR R-SERIES SENSORS WITH THE 7-PIN DIN (D70) CONNECTION TYPE

Extension cable and connector assemblies	Description	Connection Type
	Female Connector, Straight Exit and Orange Polyurethane Jacket Cable with High-Performance Shielding *(Assembly Includes D7 Connector, Part No.: 560701 and Cable, part no.: 530029)*	D7
	Female Connector, 90° Exit and Orange Polyurethane Jacket Cable with High-Performance Shielding *(Assembly Includes D7 Connector, Part No.: 560779 and Cable, part no.: 530029)*	DR
	Female Connector, Straight Exit and Standard PVC Jacket Cable *(Assembly Includes D7 Connector, Part No.: 560701 and Cable, part no.: 530026)*	DS
	Female Connector, 90° Exit and Standard PVC Jacket Cable *(Assembly Includes D7 Connector, Part No.: 560779 and Cable, part no.: 530026)*	DT
	Female Connector, Straight Exit and Black Polyurethane Jacket Cable (for higher resistance to moisture, oil and cold temperatures) *(Assembly Includes D7 Connector, Part No.: 560701 and Cable, part no.: 530052)*	DU
	Female Connector, 90° Exit and Black Polyurethane Jacket Cable (for higher resistance to moisture, oil and cold temperatures) *(Assembly Includes D7 Connector, Part No.: 560779 and Cable, part no.: 530052)*	DV

ORDERING INFORMATION - EXTENSION CABLE WITH CONNECTORS FOR R-SERIES SENSORS WITH THE (D70) CONNECTION TYPE

D					P	0
1	2	3	4	5	6	7

SENSOR CONNECTION TYPES = D _ (1 - 2)

- **D7** = Female connector, straight exit (part no. 560701), and orange polyurethane jacket cable *(part no.: 530029)*
- **DR** = Female connector, 90° exit (part no. 560779), and orange polyurethane jacket cable *(part no.: 530029)*
- **DS** = Female connector, straight exit (part no. 560701), and PVC jacket cable *(part no. 530026)*
- **DT** = Female connector, 90° exit (part no. 560779), and PVC jacket cable *(part no.: 530026)*
- **DU** = Female connector, straight exit (part no. 560701), and black polyurethane jacket cable *(part no. : 530052)*
- **DV** = Female connector, 90° exit (part no. 560779), and black polyurethane jacket cable *(part no.: 530052)*

CABLE LENGTHS = _ _ _ (3 - 5)

For standard length cables up to 100 ft.

- **005** = 5 ft.
- **015** = 15 ft.
- **025** = 25 ft.
- **050** = 50 ft.
- **100** = 100 ft.

For custom length cables over 100 ft.

— — — = Cable length (maximum cable length is dependent on baud rate).

CABLE TERMINATION = P 0 (6 - 7)

- **P0** = Pigtail cable without connector

EXTENSION CABLE WITH CONNECTORS FOR G-SERIES AND R-SERIES (SSI OUTPUT) SENSORS WITH MS (MS0), CONNECTION TYPES

Extension cable and connector assemblies	Description	Connection Type
	Female Connector, Straight Exit and Black Polyurethane Jacket Cable (for higher resistance to moisture, oil and cold temperatures) *(Assembly Includes MS Connector with adapter and boot)*	MF

ORDERING INFORMATION - EXTENSION CABLE WITH CONNECTORS FOR G-SERIES RETROFITS AND R-SERIES SENSORS (SSI OUTPUT) WITH THE (MS0) CONNECTION TYPE

M	F					P	0
1	2		3	4	5	6	7

SENSOR CONNECTION TYPES = D — 1 - 2

MF = Female connector, straight exit with adapter and boot and black polyurethane jacket cable (part no. 530052)

CABLE LENGTHS = ___ — 3 - 5

For standard length cables up to 100 ft.

005 = 5 ft.
015 = 15 ft.
025 = 25 ft.
050 = 50 ft.
100 = 100 ft.

For custom length cables over 100 ft.

— — — = Cable length (maximum cable length is dependent on baud rate).

CABLE TERMINATION = P 0 — 6 - 7

P0 = Pigtail cable without connector

BUS CABLE WITH CONNECTORS FOR R-SERIES ETHERNET SENSOR MODELS WITH (D56) CONNECTION TYPES

Bus Cable Connector and Dimensions *(Drawing dimensions are for reference only)*	Description / Specifications	Sensor Model	Cable Length	Part number
Bus cable connector option 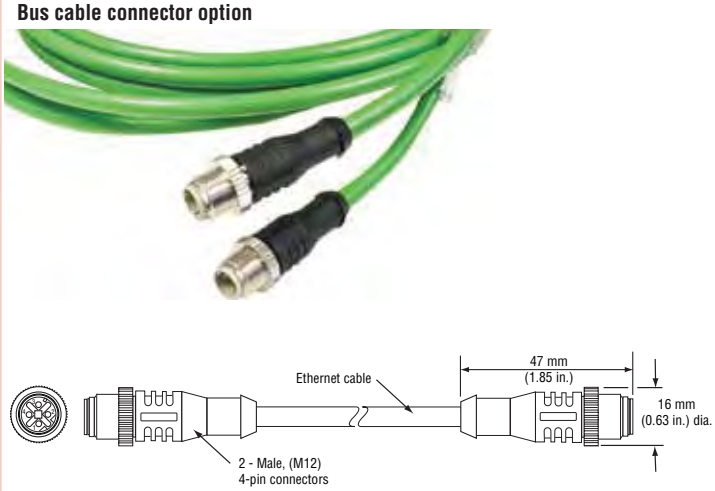	**Industrial Ethernet cable (Cat 5e Es) D-Coded** **Connector type:** Two Male, 4-pin (M12) **Cable jacket:** PUR cable jacket (green **Installation:** Field installable	**RP/RH RF, RD4** EtherCAT EtherNet/IP	5 m	530064
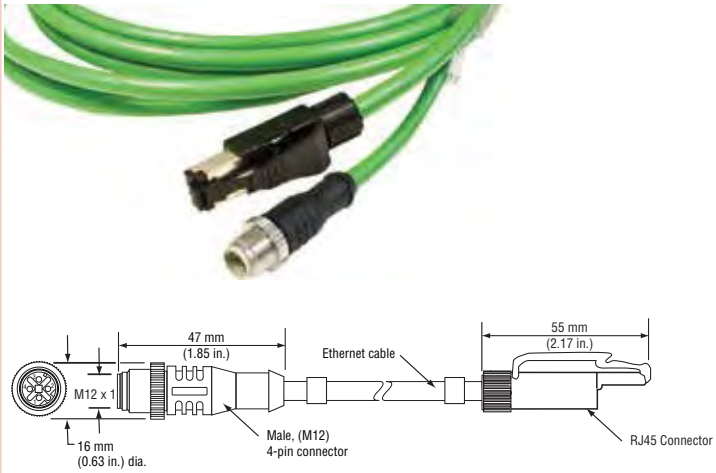	**Industrial Ethernet cable (Cat 5e Es) D-Coded** **Connector type:** One RJ45 connector and one male, 4-pin (M12) **Cable jacket:** PUR cable jacket (green) **Installation:** Cables using the RJ45 connector provide convenient sensor connection to a PC for setup and programming but are not recommended for factory floor installations.	**RP/RH RF, RD4** EtherCAT EtherNet/IP	5 m	530065
Power Cable Connector and Dimensions *(Drawing dimensions are for reference only)*	**Power cable, Female 4-pin (M8) and cable with pigtail termination**	**RP/RH RF, RD4**	**Cable Length**	**Part number**
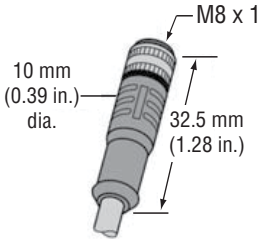	**Input:** 24 Vdc **Wire gage:** 4x0.25 mm² shielded **Cable jacket:** PUR	EtherCAT EtherNet/IP Profibus (D53 connection)	5 m 10 m 15 m	530066 530096 530093

M12 CORD SETS AND (M16) ADAPTER CABLE OPTIONS *(Photo and drawing dimensions are for reference only)*

Cord set and dimensions	Description	Sensor Model	Part number
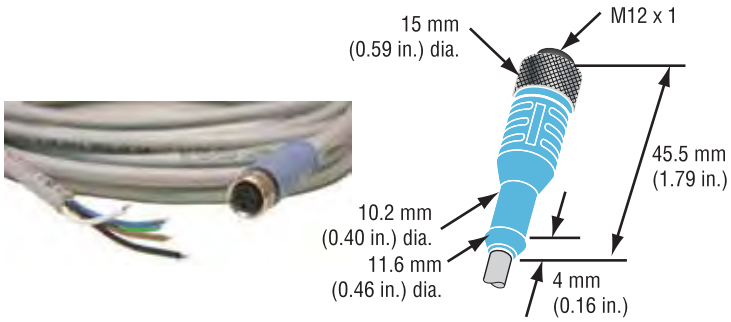	**M12 Cord set, female connector, Straight exit** 5-Pin (M12) mates with standard male (D34) integral connector **Ingress protection:** IP67 **Cable:** 5 m, shielded, pigtail end, PVC jacket	EH EP EL ER Analog	370685
(Image not available) 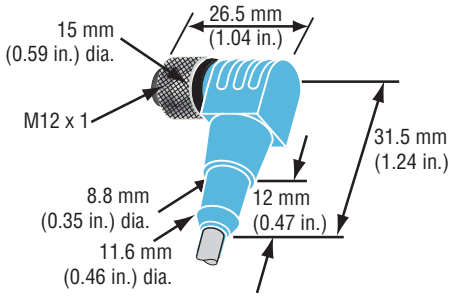	**M12 Cord set, female connector 90° exit** 5-Pin (M12) mates with standard male (D34) integral connector **Ingress protection:** IP67 **Cable:** 5 m, shielded, pigtail end, PVC jacket	EH EP EL ER Analog	370675
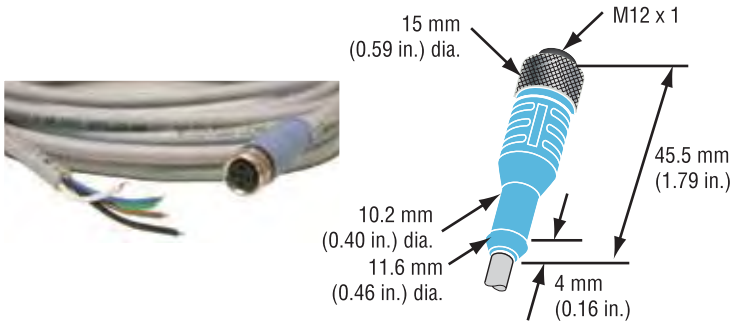	**M12 Cord set, female connector, straight exit** 8-Pin (M12) mates with standard male (D84) integral connector **Ingress protection:** IP67 **Cable:** 5 m, shielded, pigtail end, PVC jacket	EH EP EL ER Start/Stop	370686
(Image not available) 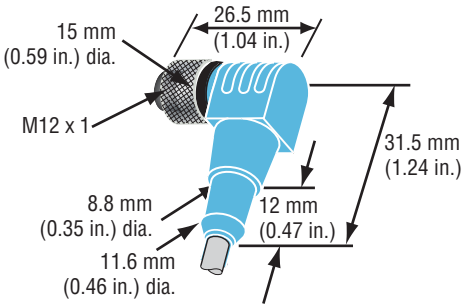	**M12 Cord set, Female, Connector 90° Exit** 8-Pin (M12) mates with standard male (D84) integral connector **Ingress protection:** IP67 **Cable:** 5 m, shielded, pigtail end, PVC jacket	EH EP EL ER Start/Stop	370676

Notes:

When connecting to sensor, maximum torque for coupling nut is 0.6 N-m (5 in.-lbs.)

CABLE RETROFITS WHEN REPLACING TEMPOSONICS II AND L-SERIES MODEL LH SENSORS WITH INTEGRAL RB CONNECTORS

Adapter Cable Description and Specifications	Sensor Replacement	Cable Length 1 ft.	Cable Length 5 ft.	Part number
Female, straight exit D6 to male RB cable connections 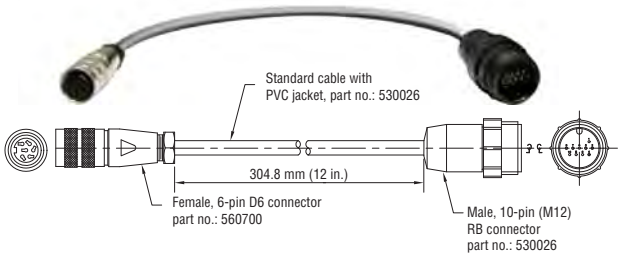	**GH/GP** Analog	●		253243-1
	GH/GP Digital-pulse or Neuter	●		253243-2
Female, straight exit D6 to male RB cable connections 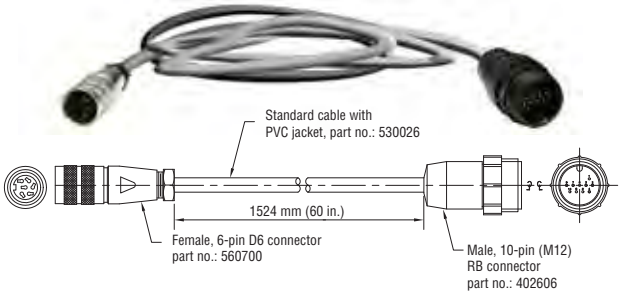	**GH/GP** Analog		●	253244-1
	GH/GP Digital-pulse and Neuter		●	253244-2

CABLE RETROFITS WHEN REPLACING TEMPOSONICS II SENSORS WITH INTEGRAL RC CONNECTORS

Adapter Cable Description and Specifications	Sensor Replacement	Cable Length 1 ft.	Cable Length 5 ft..	Part number
Female, straight exit D6 to male RC cable connections 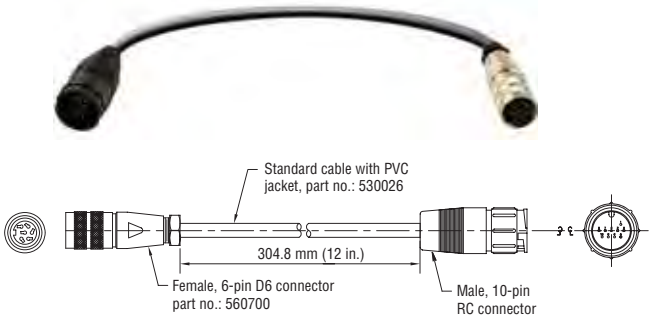	**GH/GP** Analog	●		201612-1
	GH/GP Digital-pulse and Neuter	●		201612-2
Male RC to female RB cable connections 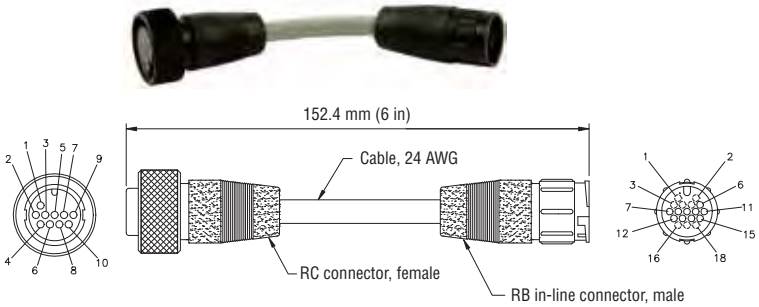	**Adapter RC to RB**	6 in.		401327

Adapter Cable Retrofits

CABLE RETROFITS WHEN REPLACING MODEL LH SENSORS WITH IN-LINE 10-PIN MS CONNECTORS

Adapter Cable Description and Specifications	Sensor Replacement	Cable Length 1 ft.	Cable Length 5 ft.	Part number
Female, straight exit D6 to male MS cable connections 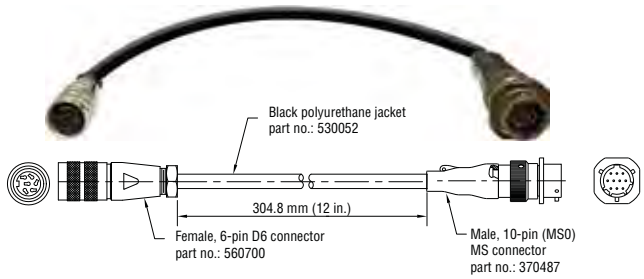	**GH/GP** Analog	●		253245-1
	GH/GP Digital-pulse and Neuter	●		253245-2
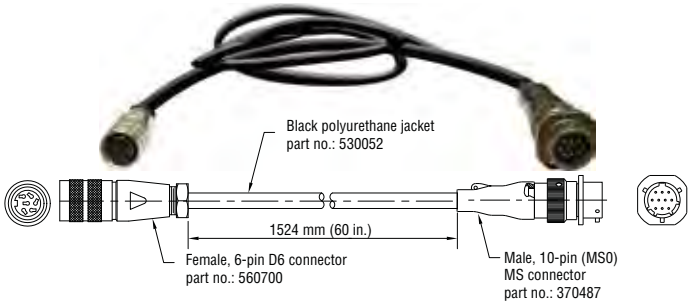	**GH/GP** Analog		●	253246-1
	GH/GP Digital-pulse or Neuter		●	253246-2

CABLE RETROFITS WHEN REPLACING TEMPOSONICS II AND L-SERIES MODEL LH SENSORS WITH IN-LINE 10-PIN MS CONNECTORS WIRED FOR R1, R2 OR R3 CONNECTION TYPES

Adapter Cable Description and Specifications	Sensor Replacement	Cable Length 1 ft.	Cable Length 5 ft.	Part number
Female, straight exit D6 to MS (R1, R2 or 10-pin male) cable connections 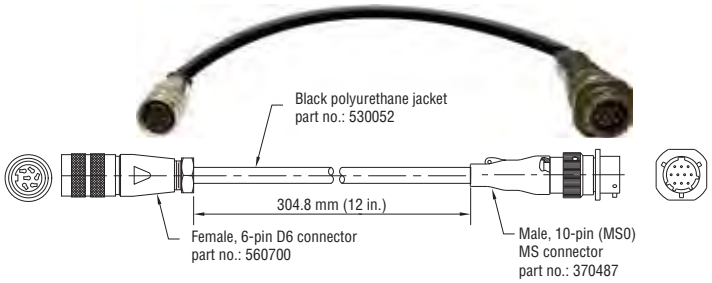	**10-pin R3 Connection using GH/GP** Digital-pulse	●		253245-3
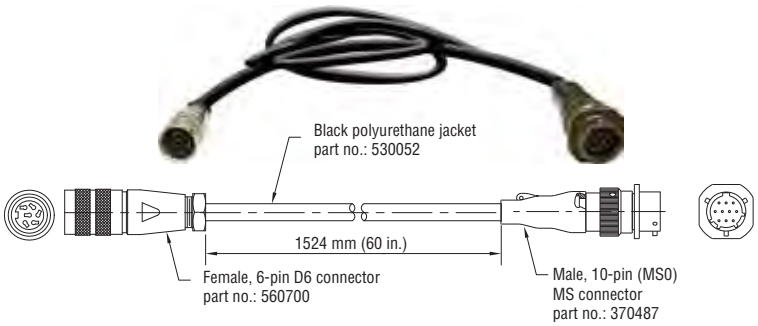	**10-pin R3 Connection using GH/GP** Digital-pulse		●	253246-3

Adapter Cable Retrofits

CABLE RETROFITS WHEN REPLACING TEMPOSONICS II AND L-SERIES MODEL LH SENSORS WITH IN-LINE 10-PIN MS CONNECTORS WIRED FOR R1, R2 OR R3 CONNECTION TYPES

Adapter Cable Description and Specifications	Sensor Replacement	Cable Length 1 ft.	Cable Length 5 ft.	Part number
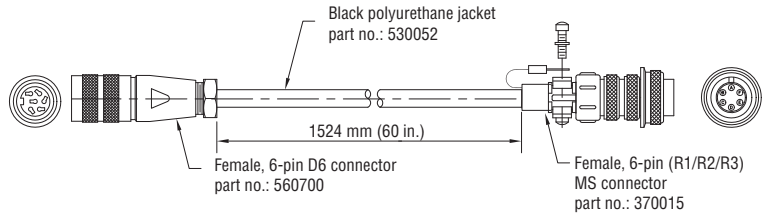	**R1 Connection using GH/GP** with Positive interrogation		●	253302-1
	R2 Connection for GH/GP with negative interrogation		●	253302-2

CABLE RETROFITS WHEN REPLACING R-SERIES AND L-SERIES SENSOR MODELS LH AND LP WITH INTEGRAL RG CONNECTORS

Adapter Cable Description and Specifications	Sensor Replacement	Cable Length 1 ft.	Cable Length 5 ft.	Part number
Female, straight exit D6 to male RG cable connections 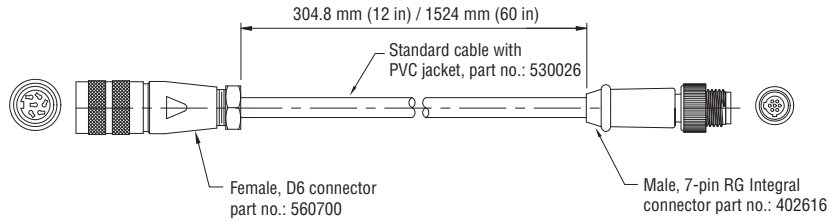	**RH/RP** Analog **GH/GP** Analog and Digital-pulse	●		253248-1
	RH/RP Analog **GH/GP** Analog and Digital-pulse		●	253248-2
Female, straight exit D7 to male RG cable connections 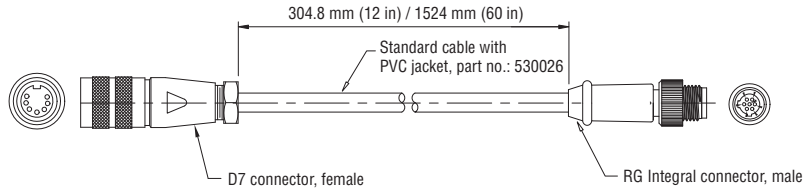	**RH/RP** SSI	●		253315-1
	RH/RP SSI		●	253315-2

CABLE RETROFITS WHEN REPLACING MODEL LP SENSORS WITH INTEGRAL C-STYLE OR IN-LINE H OR J STYLE CONNECTORS

Adapter Cable Description and Specifications	Sensor Replacement	Cable Length 1 ft.	Cable Length 7 ft.	Part Number
Female, straight exit D6 to male AMP cable connections 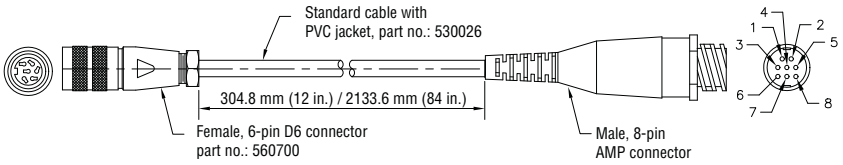	**GH/GP** Analog	●		253247-1
	GH/GP Digital-pulse	●		253247-2
	GH/GP Analog		●	253247-3
	GH/GP Digital-pulse		●	253247-4
	GH/GP Reverse-acting Analog	●		253710-1

Adapter Cable Retrofits

CABLE RETROFITS WHEN REPLACING MODEL LP SENSORS WITH INTEGRAL C-STYLE OR IN-LINE H OR J STYLE CONNECTORS

Adapter Cable Description and Specifications	Sensor Replacement	Cable Length 1 ft.	Cable Length 7 ft.	Part Number
5-pin Female (M12) to 8-pin male AMP cable connections 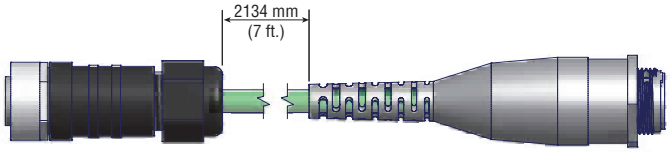	**EP/ER** Analog		●	254259
8-pin Female (M12) to 8-pin male AMP cable connections 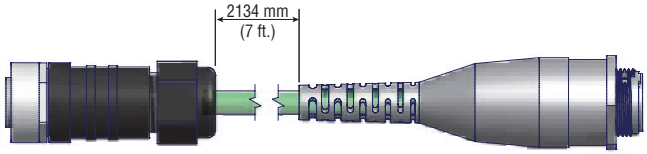	**EP/ER** Start/Stop		●	254261

CABLE RETROFITS WHEN REPLACING E-SERIES WITH INTEGRAL 6-PIN (D60) CONNECTORS

Adapter Cable Description and Specifications	Sensor Replacement	Cable Length 300 mm	Part number
5-pin female (M12) to 6-pin male D60 cable connections 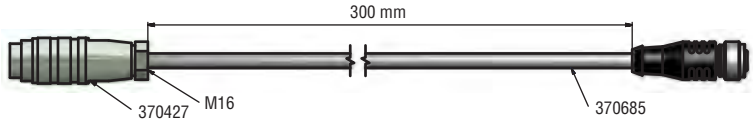	**E-Series 2011**	●	254257
8-pin female (M12) to 6-pin male D60 cable connections 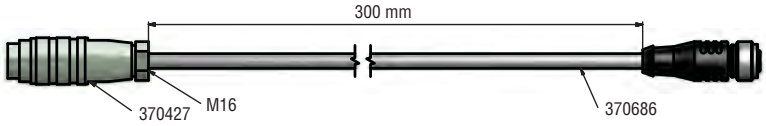	**E-Series 2011**	●	254258

CABLE RETROFIT WHEN REPLACING L-SERIES SENSORS WITH REVERSE-ACTING OUTPUT

Adapter Cable Description and Specifications	Sensor Replacement	Cable Length	Part number
Female, straight exit D6 to male D6 cable connections	**GH/GP** Reverse-acting Analog	1 ft.	253411

Adapter Cable Retrofits

4-PIN STYLE CABLE CONNECTOR FOR R-SERIES INDUSTRIAL ETHERNET SENSOR CONNECTIONS

Cable Connector and Dimensions	Description / Specifications	Sensor Model Reference	Part number
Male, straight exit cable connections 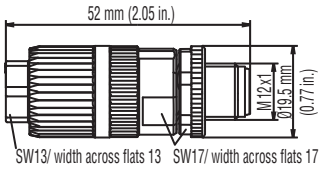	**Bus Cable Connector, Male** **Style:** 4-pin (M12) **Housing:** Zinc nickel plated **Termination:** D-coded with insulation displacement technology **Installation:** Field installable	**RP/RH** EtherCAT EtherNet/IP	370523
	Connector end cap (Unused connectors should be covered by this protective cap)	**RP/RH** EtherCAT EtherNet/IP	370537

MATING CABLE CONNECTOR OPTIONS FOR (D34) CONNECTOR TYPES *(Photo and drawing dimensions are for reference only)*

Connector and dimensions	Description	Sensor Model Reference	Part number
 (When connecting to sensor, maximum torque for coupling nut is 0.6 N-m (5 in.-lbs.)) 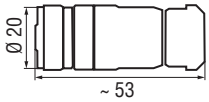	**Female cable connector, straight exit (Field installable)** 5-Pin (D34) Mates with standard male (M12) integral connector **Termination:** Screw terminals	**EP/ER/EH/EL** Analog CANopen	370677
 (When connecting to sensor, maximum torque for coupling nut is 0.6 N-m (5 in.-lbs.)) 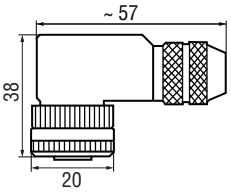	**Female cable connector, 90° exit (Field installable)** 5-Pin (D34) Mates with standard male (M12) integral connector **Termination:** Screw terminals	**EP/ER/EH/EL** Analog CANopen	370678

MATING CABLE CONNECTOR OPTIONS FOR (D84) CONNECTOR TYPES *(Photo and drawing dimensions are for reference only)*

Connector and dimensions	Description	Sensor Model Reference	Part number
 (When connecting to sensor, maximum torque for coupling nut is 0.6 N-m (5 in.-lbs.)) 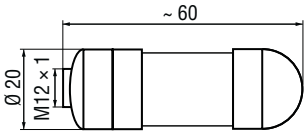	**Female cable connector, straight exit (Field installable)** 8-Pin (D84) Mates with standard male (M12) integral connector **Termination:** Screw terminals	**EP/ER/EH/EL** Start/Stop SSI	370694
 (When connecting to sensor, maximum torque for coupling nut is 0.6 N-m (5 in.-lbs.)) 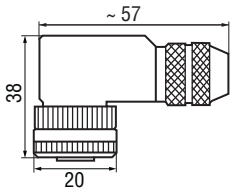	**Female cable connector, 90° exit (Field installable)** 8-Pin (D84) Mates with standard male (M12) integral connector **Termination:** Screw terminals	**EP/ER/EH/EL:** Start/Stop SSI	370699

Connectors

5-PIN STYLE CONNECTOR OPTIONS FOR R-SERIES DEVICENET SENSORS WITH (D51) CONNECTION TYPES

Connector and Dimensions *(Drawing dimensions are for reference only)*	Description and Specifications	Sensor Model Reference	Part Number
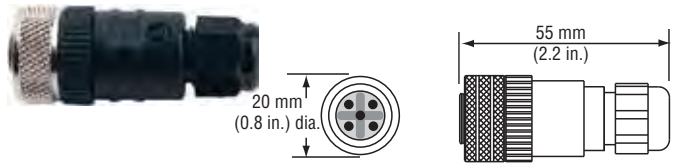	**Cable connector, female, straight exit** **Style:** 5-pin (D51) **Installation:** Field installable	**RP/RH** DeviceNet	370375
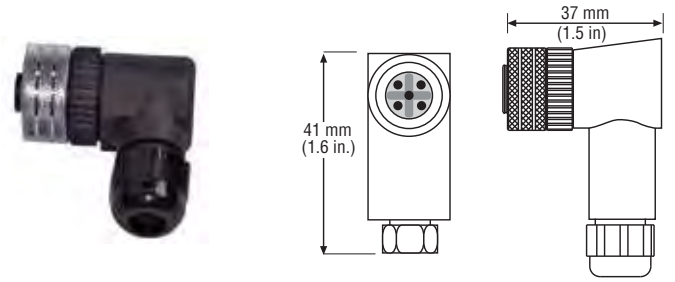	**Cable connector, female,90° exit** **Style:** 5-pin (D51) Field installable	**RP/RH** DeviceNet	370376

4-PIN AND CABLE CONNECTOR OPTIONS FOR R-SERIES SENSORS WITH (D53), (D56), AND (D58) CONNECTION TYPES

Connector and Dimensions *(Drawing dimensions are for reference only)*	Description and Specifications	Sensor Model Reference	Part Number
	Cable connector, female, straight exit **Style:** 4-pin (M8) **Housing:** Zinc nickel plated **Termination:** Solder **Contact insert:** Silver plated **Input Power:** 24 Vdc **Installation:** Field installable, (D53) (D54) (D56) connection types	**RP/RH** Profibus EtherCAT Ethernet/IP Profinet	370504
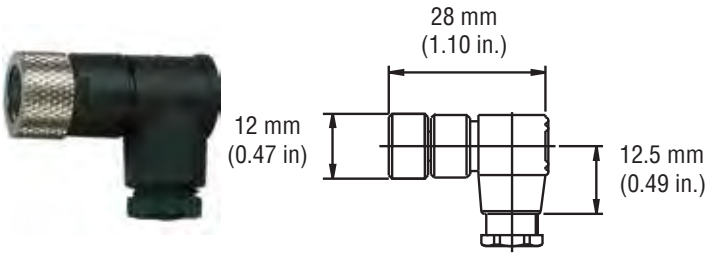	**Cable connector, female, 90° exit** **Style:** 4-pin (M8) **Housing:** Zinc nickel plated **Termination:** Solder **Contact insert:** Silver plated **Input voltage:** 24 Vdc **Installation:** Field installable, (D53) connection types	**RP/RH** Profibus EtherCAT Ethernet/IP Profinet	560886
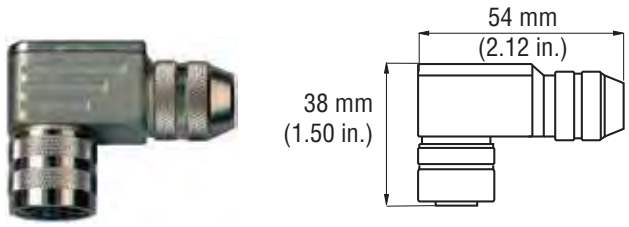	**Cable connector, female, 90° exit** **Style:** 5-pin (M12) **Housing:** Zinc nickel plated **Termination:** Screw **Contact insert:** Silver plated **Installation:** Field installable, (D53) connection types	**RP/RH** Profibus EtherCAT Ethernet/IP Profinet	370514

5-PIN CABLE CONNECTOR OPTIONS FOR R-SERIES PROFIBUS SENSORS WITH (D53) CONNECTION TYPES

Connector and Dimensions *(Drawing dimensions are for reference only)*	Description and Specifications	Sensor Model Reference	Part number
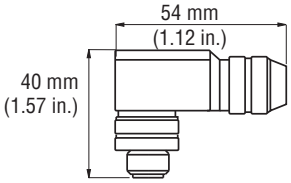	**Cable connector, male, 90° exit** **Style:** 5-pin (M12) **Housing:** Zinc nickel plated **Termination:** Screw **Contact insert:** Silver plated **Installation:** Field installable, (D53) connection types	**RP/RH** Profibus	370515
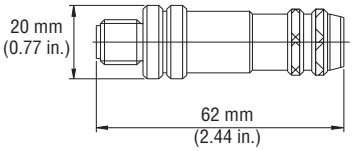	**Cable connector, male, straight exit** **Style:** 5-pin (M12) (3-pins populated) **Housing:** Zinc nickel plated **Termination:** IDC **Contact insert:** Silver plated **Installation:** Field installable, (D53) connection types	**RP/RH** Profibus	560884
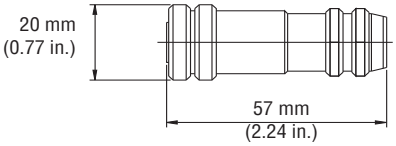	**Cable connector, female, straight exit** **Style:** 5-pin (M12) (3-pins populated) **Housing:** Zinc nickel plated **Termination:** IDC **Contact insert:** Silver plated **Installation:** Field installable, (D53) connection types	**RP/RH** Profibus	560885

5-PIN CABLE CONNECTOR OPTIONS FOR R-SERIES PROFIBUS SENSORS WITH (D53) CONNECTION TYPES

Connector and Dimensions *(Drawing dimensions are for reference only)*	**Description and Specifications**	**Sensor Model Reference**	**Part Number**
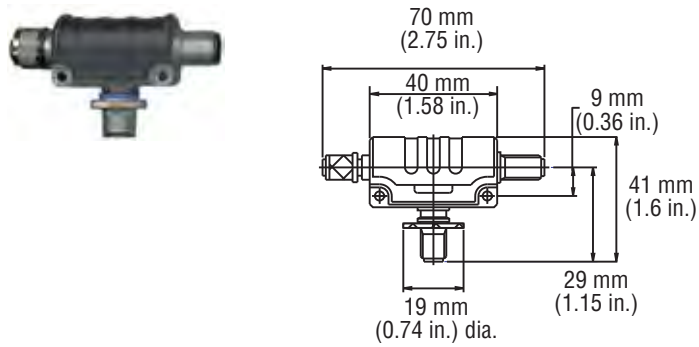	**5-pin Profibus (M12) T connector** **Style:** 5-pin (M12) **Housing:** Zinc nickel plated **Termination:** Solder **Contact insert:** Silver plated **Installation:** Field installable, (D53) connection types	**RP/RH** Profibus	560887
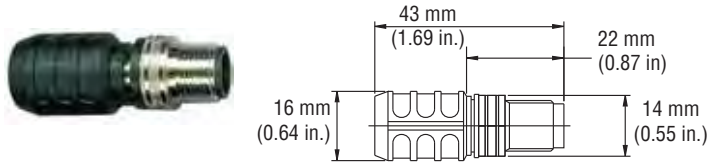	**Profibus Bus Terminator, male, straight exit** **Style:** 5-pin (M12) **Housing:** Zinc nickel plated **Termination:** Solder **Contact insert:** Silver plated **Installation:** Field installable, (D53) connection types	**RP/RH** Profibus	560888

6-PIN DIN (D60) STYLE CABLE CONNECTOR OPTIONS

Connector and Dimensions *(Drawing dimensions are for reference only)*	**Description / Specifications**	**Sensor Model Reference**	**Part number**
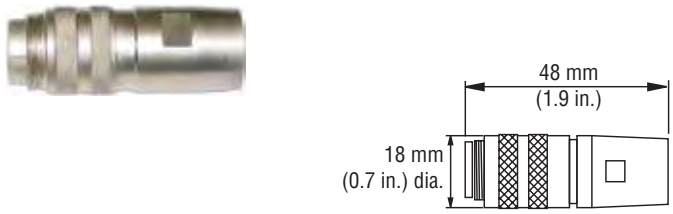	**Profibus bus terminator for male cable connector type** **Style:** (STA09131H06) **Housing:** Zinc nickel plated **Termination:** Solder **Contact insert:** Silver plated **Installation:** Field installable, Mates with standard Female connector	**RP/RH** Profibus	252347

Connectors

6-PIN DIN (D60) STYLE CABLE CONNECTOR OPTIONS

Connector and Dimensions *(Drawing dimensions are for reference only)*	Description and Specifications	Sensor Model Reference	Part number
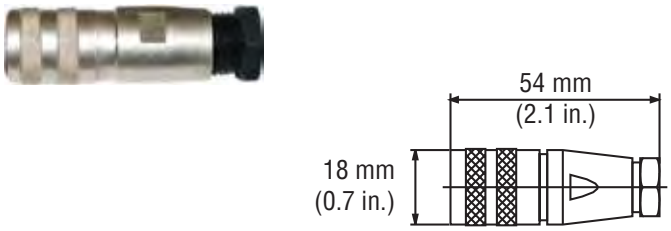	**Cable connector, female, straight exit** **Style:** 6-pin DIN (D6) **Housing:** Zinc nickel plated **Termination:** Solder **Contact insert:** Silver plated **Cable clamp:** PG9 **Installation:** Field installable (D63) connection types. Cable dia. 8 mm max.	**RP/RH** Profibus	370423
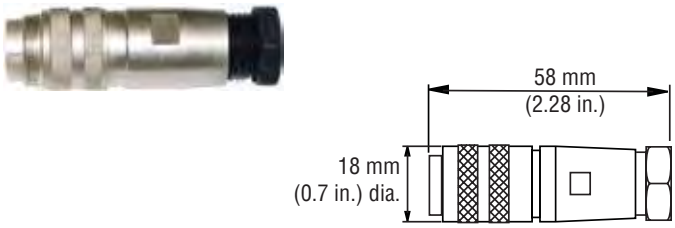	**Cable connector, male, straight exit** **Style:** 6-pin DIN (D6) **Housing:** Zinc nickel plated **Termination:** Solder **Contact insert:** Silver plated **Cable clamp:** PG9 **Installation:** Field installable (D63) connection type Cable dia. 8 mm max.	**RP/RH** Profibus	370427
	Cable connector, male, 90° exit **Style:** 6-pin DIN (D6) **Housing:** Zinc nickel plated **Termination:** Solder **Contact insert:** Silver plated **Cable clamp:** PG9 **Installation:** Field installable (D63) connection types. Cable dia. 8 mm max.	**RP/RH**	370621
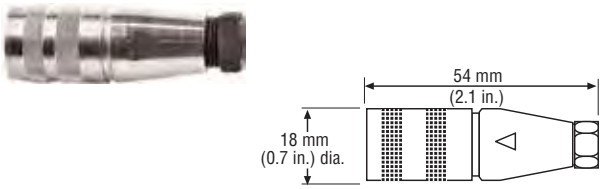	**Cable connector, female, straight exit** **Style:** 6-pin DIN (D6) **Housing:** Zinc nickel plated **Termination:** Solder **Contact insert:** Silver plated **Cable clamp:** PG7 **Installation:** Field installable, Mates with standard male (D60) integral connector	**RP/RH** **GP/GH**	560700
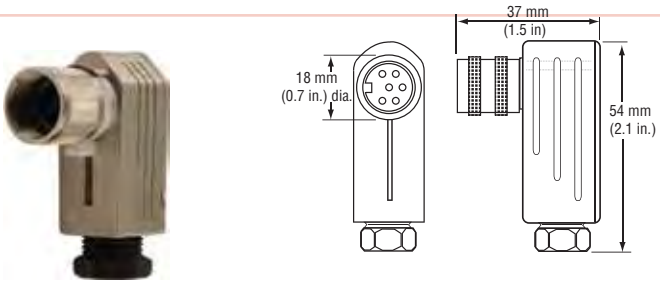	**Cable connector, female,90° exit** **Style:** 6-pin DIN (D6) **Housing:** Zinc nickel plated **Termination:** Solder **Contact insert:** Silver plated **Cable clamp:** PG7 **Installation:** Field installable, Mates with standard male (D60) integral connector	**RP/RH** **GP/GH**	560778

Connectors

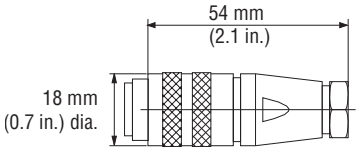	**Cable connector, male, straight exit** **Style:** 6-pin DIN (D6) **Housing:** Zinc nickel plated **Termination:** Solder **Contact insert:** Silver plated **Cable clamp:** PG7 **Installation:** Field installable	**RP/RH GP/GH**	370372

7-PIN STYLE CABLE CONNECTOR OPTIONS FOR R-SERIES SENSORS WITH (D70) CONNECTION TYPES

Cable Connector and Dimensions	Description and Specifications	Sensor Model Reference	Part number
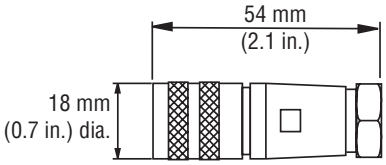	**Cable connector, female, straight exit** **Style:** 7-pin (D7) **Housing:** Zinc nickel plated **Termination:** Solder **Contact insert:** Silver plated **Cable clamp:** PG9 **Installation:** Field installable for (D70) connection types. Cable dia. 8 mm max.	**RP/RH** SSI	370624 (previously 370516)
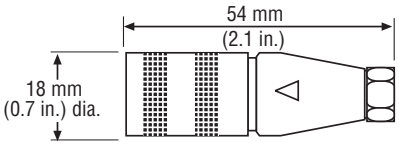	**Cable connector, female, straight exit** **Style:** 7-pin (D7) **Housing:** Zinc nickel plated **Termination:** Solder **Contact insert:** Silver plated **Cable clamp:** PG7 **Installation:** Field installable (D70) connection types. Cable dia. 6 mm max.	**RP/RH** SSI	560701
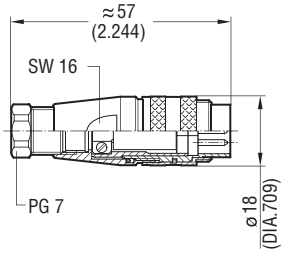	**Cable connector, male, straight exit** **Style:** 7-pin (D7) **Housing:** Zinc nickel plated **Termination:** Solder **Contact insert:** Silver plated **Cable clamp:** PG7 **Installation:** Field installable for (D70) connection types. Cable dia. 6 mm max.	**RP/RH** SSI	370565
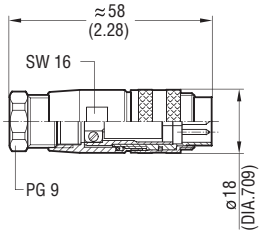	**Cable connector, male, straight exit** **Style:** 7-pin (D7) **Housing:** Zinc nickel plated **Termination:** Solder **Contact insert:** Silver plated **Cable clamp:** PG9 **Installation:** Field installable (D70) connection types. Cable dia. 8 mm max.	**RP/RH** SSI	370625 (previously 370566)

Connectors

CABLE CONNECTOR OPTIONS FOR R-SERIES G-SERIES AND L-SERIES LEGACY SENSOR MODELS

Cable Connector and Dimensions	Description and Specifications	Sensor Model Reference	Part number
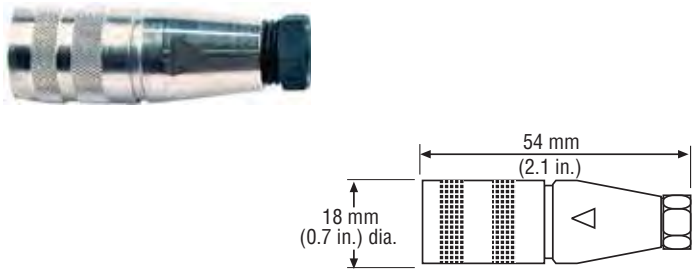	**Cable connector, female, straight exit** **Style:** (D8) **Housing:** Zinc nickel plated **Termination:** Solder **Contact insert:** Silver plated **Cable clamp:** PG7 **Installation:** Field installable for (D80) connection types.	L-SERIES	370391
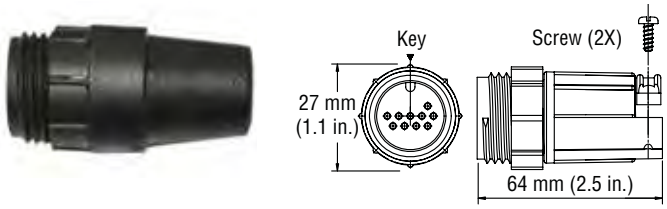	**Cable connector, male, RB straight exit** **Style:** 10-pin **Housing:** Zinc nickel plated **Termination:** Solder **Contact insert:** Silver plated **Cable clamp:** PG7 **Installation:** Field installable	GP/GH	370486
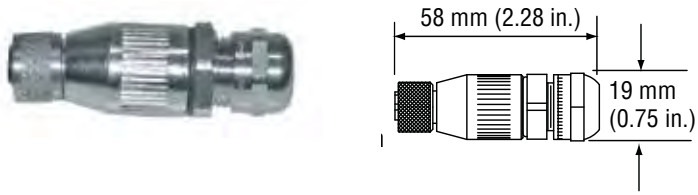	**Cable connector, female, RG straight exit** **Style:** RG **Housing:** Zinc nickel plated **Termination:** Solder **Contact insert:** Silver plated **Cable clamp:** PG7 **Installation:** Field installable	RP/RH L-SERIES	401366
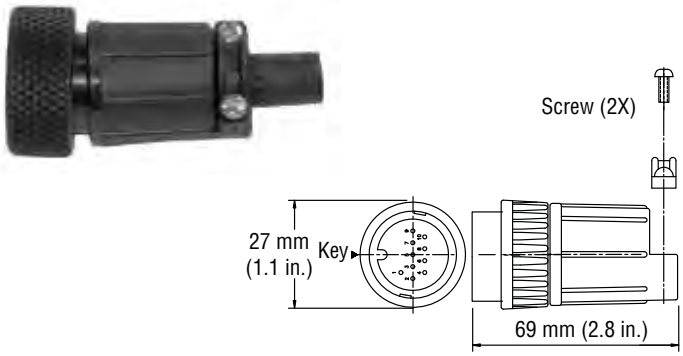	**Cable connector, female, RB/RC straight exit** **Style:** RB/RC retrofit **Housing:** Zinc nickel plated **Termination:** Solder **Contact insert:** Silver plated **Cable clamp:** PG7 **Installation:** Field installable	GP/GH	400755-3
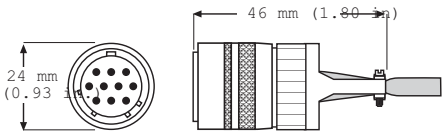	**Cable connector, female, MSO straight exit** **Style:** MSO **Housing:** Cadmium plated aluminum **Termination:** Solder **Contact insert:** Gold plated **Installation:** Field installable	RP/RH GP/GH	370013

Connectors

H	H						
1	2	3	4	5	6	7	8

SENSOR MODELS RH AND GH = H H **1-2**

PRESSURE PIPE AND FLANGE STYLES = ☐ **3**

T = US customary threads, raised-faced flange and pressure pipe, standard

S = US customary threads, flat-faced flange and pressure pipe, standard

M = Metric threads, flat-faced flange and pressure pipe, standard

STROKE LENGTH = ☐☐☐☐☐ **4-8**

_ _ _ _ **M** = Millimeters
(Encode in 5 mm increments)

_ _ _ . _ **U** = Inches and tenths
(Encode in 0.1 in. Increments)

Stroke Length Notes:

1. R-Series RH stroke length = 25 mm (1 in.) to 7620 mm (300 in.)
2. G-Series GH stroke length = 50 mm (2 in.) to 7620 mm (300 in.)

MECHANICAL-END CONNECTOR SELECTIONS

Cable Connector and Dimensions	Description and Specifications	Sensor Model Reference	Part number
	Joint-rod sleeve	RP/GP EP/EL	401603
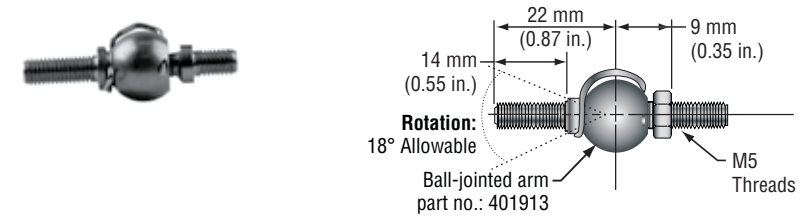	**Ball-jointed arm**	RP/GP EP/EL	401913
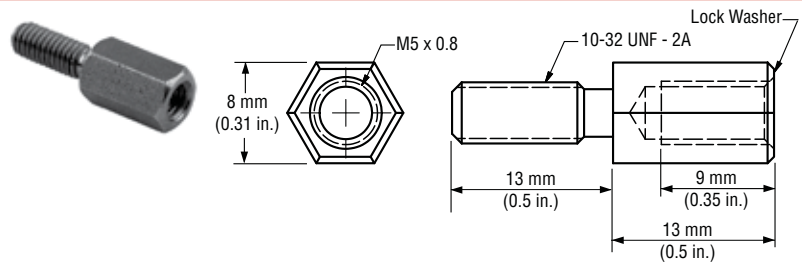	**Threaded adapter** Female M5 to male 10 - 32	RP/GP EP/EL	402849
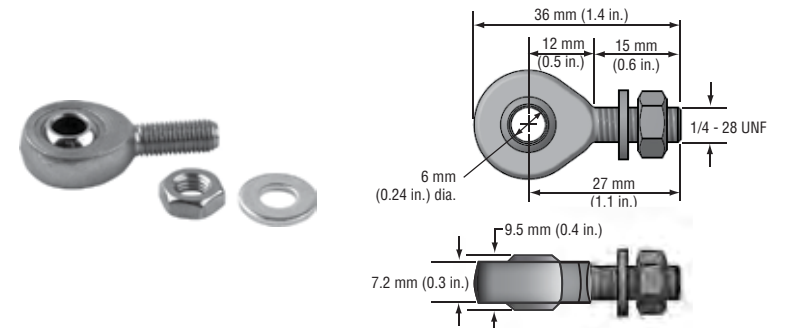	**Rod end** US customary measurement Optional, male 1/4 - 28 threads	ER	254235
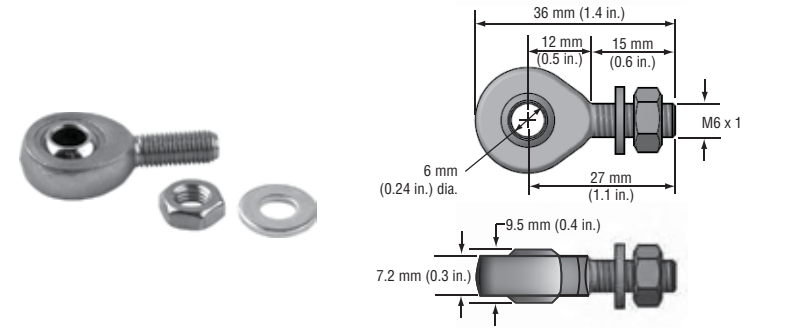	**Rod end** Metric measurement Optional, male M6 threads	ER	254210
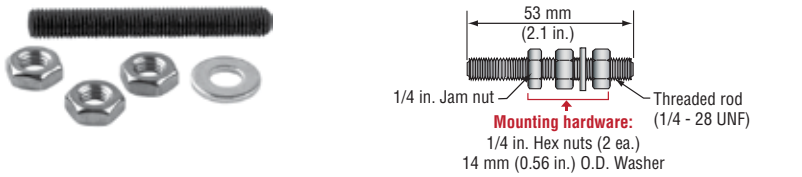	**Stud end** Optional mounting hardware kit Hex nuts (2 pcs.), jam nut and washer	ER	251975

Optional extension rod quick reference chart

Sensor models with captive-sliding magnet

RP	GP	EP	Extension rod length	Part number
●	●	●	60.3 mm (2.375 in.)	401768-2
●	●	●	85.7 mm (3.375 in.)	401768-3
●	●	●	111.1 mm (4.375 in.)	401768-4
●	●	●	161.9 mm (6.375 in.)	401768-6
●	●	●	187.3 mm (7.375 in.)	401768-7
●	●	●	212.7 mm (8.375 in.)	401768-8
●	●	●	238.1 mm (9.375 in.)	401768-9
●	●	●	263.5 mm (10.375 in.)	401768-10
●	●	●	314.3 mm (12.375 in.)	401768-12
●	●	●	365.1 mm (14.375 in.)	401768-14
●	●	●	390.5 mm (15.375 in.)	401768-15
●	●	●	466.7 mm (18.375 in.)	401768-18
●	●	●	517.5 mm (20.375 in.)	401768-20
●	●	●	542.9 mm (21.375 in.)	401768-21
●	●	●	619.1 mm (24.375 in.)	401768-24
●	●	●	771.5 mm (30.375 in.)	401768-30
●	●	●	923.9 mm (36.375 in.)	401768-36
●	●	●	1076.3 mm (42.375 in.)	401768-42
●	●	●	1228.7 mm (48.375 in.)	401768-48
●	●	●	1533.5 mm (60.375 in.)	401768-60

Optional extension rod example

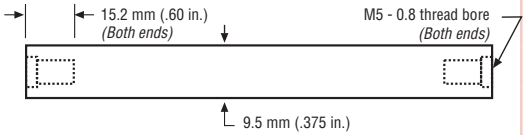

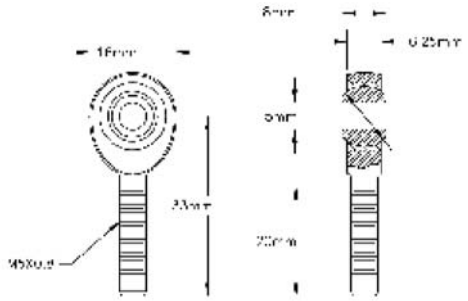

Rod end M5 threads *(For use with 401768-x optional extension rod shown above)	RP GP EP/EL	401872

Installation Hardware

OPTIONAL INSTALLATION HARDWARE

Hardware and Dimensions	Description and Specifications	Sensor Model Reference	Part number
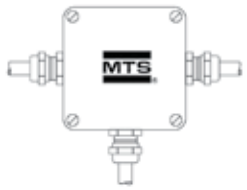	**Profibus filter box** **Dimensions:** 80 mm (3.5 in.) X 75 mm (2.95 in.) 58 mm (2.28 in.) **Application:** EMC conformal feeding of 24 Vdc supply voltage into the Profibus-DP hybrid cable	**RP/RH** Profibus	252916
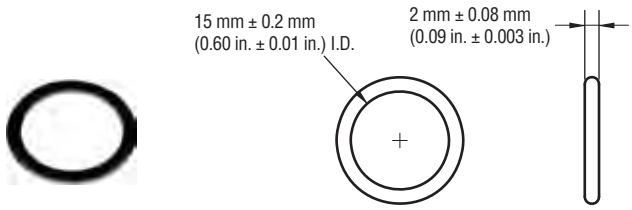	**O-Ring** **Material:** Fluoroelastomer 75 ± 5 durometer **Dimensions:** Metric flange with M18 X 1.5 threads **Application:** Use with style M housings	**GH/RH/EH**	401133
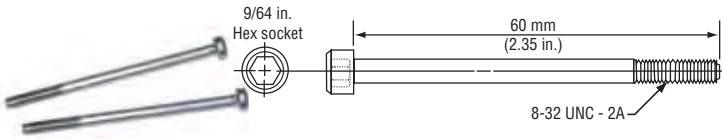	**Electronics housing screw** **Type:** 8-32 UNC - 2A **Application:** -Used to install sensor cartridge (RHB or GHB) into old LH or old RH pressure pipe/ flange (Typical torque 0.9 N-m (8 in.-lbs.)	**GHB/RHB**	402617
	Hex-jam nut **Type:** 3/4-16 UNF **Material:** Stainless steel with nylon insert **Application:** T and S style housings	**GH/RH/EH**	500015
	Hex-jam nut **Type:** M18 X 1.5 threads **Material:** Stainless steel **Application:** Use for M style housing	**GH/RH/EH**	500018

OPTIONAL INSTALLATION HARDWARE

Hardware and Dimensions	Description and Specifications	Sensor Model Reference	Part number
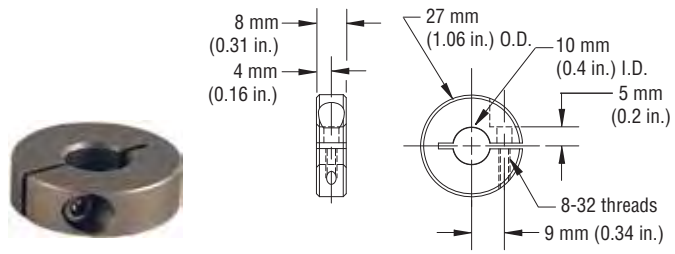	**Collar** **Material:** 304 Stainless steel **Application:** Pressure housing and float 251447	GH/RH /EH	560777
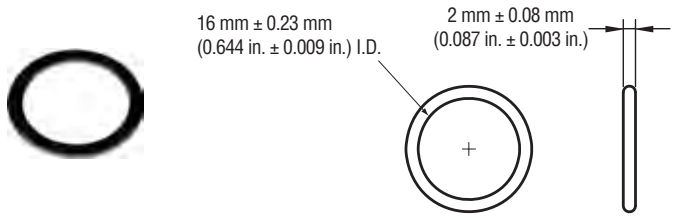	**O-Ring** **Material:** Fluoroelastomer 75 ± 5 durometer **Dimensions:** Std. flange with 3/4-16 UNF threads **Application:** T and S style housings	GH/RH/EH	560315
	Magnet mounting screws **Type:** 6-32 X 7/8 Material: Stainless steel **Application:** Standard ring magnet mounting (part no,: 201542-2) 4 required or open-ring magnet mounting (part no.: 251416-2) 2 required	RH/RP GH/GP EH/EP/EL	560357
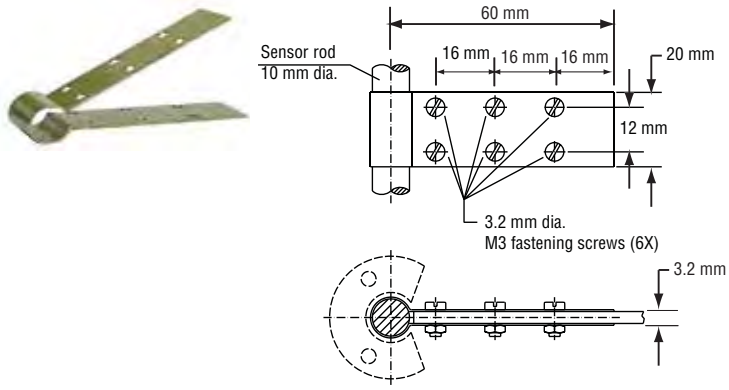	**Fixing clip** Material: Brass, non magnetic **Application:** Used to secure sensor rod when using open-ring magnet	RH/GH/EH	561481

Installation Hardware

PROGRAMMING TOOLS

Programming selections	Description and Specifications	Sensor Model Reference	Part number
	R-Series Analog hand-held Programmer **Application:** Adjusting setpoints 1 and 2 for R-Series Analog output sensor models with single magnets	**RP/RH** Analog	253124
	R-Series Analog Cabinet Programmer **Application:** Adjusting setpoints 1 and 2 for R-Series Analog output sensor models with single magnets and features snap-in mounting on standard 35 mm DIN rail. This programmer can be permanently mounted in a control cabinet and includes a program/run switch.	**RP/RH** Analog	253408
	R-Series Analog Programming Kit Kit includes: Interface converter box, power supply, and cabling. Download setup software from www.mtssensors.com. **Application:** Programming software for R-Series Analog output sensor models	**RP/RH** Analog	253309-1
	R-Series SSI Programming Kit Kit includes: Interface converter box, power supply, and cabling. Download setup software from www.mtssensors.com. **Application:** Programming software for R-Series SSI output sensor models	**RP/RH** SSI	253310-1
	R-Series Profibus Node Address Programmer kit **Application:** Node address Programming for R-Series Profibus output sensor models	**RP/RH** Profibus	280640

PROGRAMMING TOOLS

Programming selections	Description and Specifications	Sensor Model Reference	Part number
	R-Series CANbus Field Address Programmer **Application:** Field address Programming for R-Series CANopen output sensor models	**RP/RH** CANopen	252382-D62
	G-Series Analog Hand-held Programmer **Application:** Programming for G-Series Analog output sensor models	**GP/GH** Analog	253853
	G-Series Analog PC Programming Kit Kit includes: Interface converter box, power supply and cabling. Download setup software from www.mtssensors.com **Application:** Programming software for G-Series Analog output sensor models	**GP/GH** Analog	253311-1
	G-Series Digital-pulse PC Programming Kit Kit includes: Interface converter box, power supply and cabling. Download setup software from www.mtssensors.com **Application:** Programming software for G-Series Digital-pulse output sensor models	**GP/GH** Digital-Pulse (PWM) (Start/Stop)	253312-1
	Profibus master simulator. **Application:** Function and diagnostic data verification and to perform slave address adjustments for R-Series Profibus output sensor models	**RP/RH** Profibus	401727

Field Programming

PROGRAMMING TOOLS

Programming selections	Description and Specifications	Sensor Model Reference	Part number
	Profibus cable for master simulator (401727)	**RP/RH** Profibus	401726

Temposonics®

Magnetostrictive, Absolute, Non-contact
Linear-Position Sensors

High Pressure Housing - Explosion Proof

R-Series (RH) and G-Series (GH) Sensors

Outputs - Reference G and R-Series Data Sheets

Document Part Number
550960 Revision C

PRECISION POSITION MEASUREMENT
HIGH PRESSURE HOUSING (HPH)

- **This High Pressure Housing is ATEX EEx approved and UL and cUL approved for use in hazardous locations with Temposonics position sensors.**
- **ATEX, UL and cUL approvals cover flammable gases, vapors and liquids. The ATEX approval also covers dust**
- **Several design combinations are available to fit your application:**
  - M18 or 3/4 in. UNF mounting flange thread
  - M20 or 1/2 in. NPT cable gland thread
  - long or short tops
  - top-mounted
  - side-mounted
  - dual side-mounted cable glands
    (See combination chart for more information)
- **All parts are made of 316L stainless steel. The HPH housing is also available in non-approved versions ensuring an outstanding protection to the sensor when used in rugged applications with high humidity and aggressive gases.**

The High Pressure Housing (HPH) is ATEX EEx approved or UL and cUL approved for use in hazardous locations with a range of Temposonics linear-position sensors

Product overview

This housing is made to fit Temposonics R-Series and G-Series sensors with analog and digital outputs, both integral cable and connector versions can be used.

The High Pressure Housing provides a cost efficient solution to sensor applications in hazardous locations. When using the HPH with Temposonics linear-position sensors, sensor maintenance and replacement is simplified.

HIGH PRESSURE HOUSING OPTIONS

Short Housing with top-mounted cable gland

Long housing with top-mounted cable gland

Short housing with side-mounted cable gland

Long housing with dual side-mounted cable glands

Product specifications

Parameters	Specifications
Protection type: ATEX: IECEx	0044 TÜV 13 ATEX 121172 X IECEx TUN 13 0011 X II 1/2 G Ex d IIC T5* Gb Tamb -40º to +70ºC II 1/2 D Ex tb IIIC T100C Db IEC 60079-0:2011, IEC 60079-1:2007, IEC 60079-26:2006, IEC 60079-31, EN 60079-0:2009, EN 60079-1:2007, EN 60079-26:2007, EN 60079-31:2009 Only with ATEX or UL approved cable glands
UL/cUL:	Class 1, Division 1, Groups A, B, C and D hazardous locations Temperature code T5 As to fire, electrical shock and explosion hazards only UL certificate no. 2PD0 In accordance with UL 1203 standard
Material:	Stainless steel AISI 316L (1.4404)
Cable gland threads:	M20 x 1.5
Ingress protection codes:	IP 68 (only with IP 68 approved cable gland)
Approved sensors:	G-Series Analog + Start/Stop R-Series Analog R-Series Profibus R-Series CANbus R-Series SSI R-Series DeviceNet *Consult individual sensor data sheets for more product specifications and sensor ordering information at www.mtssensors.com
Mounting flange:	M18 x 1.5 or 3/4 in. - 16 UNF - 3A
Pressure rating:	350 Bar continuous
Peak pressure:	530 Bar
Magnet type:	Ring magnet (GF plastic with permanent magnet)
Level measurement:	Float on request

High Pressure Housing dimensions

HIGH PRESSURE HOUSING DIMENSION REFERENCES

The Summit High Pressure Housing is available in several design combinations and two cable gland mounting options, top and side. Refer to *'Table 1 Design Combination Chart' on page 3* for a design combination and accessory options for your application

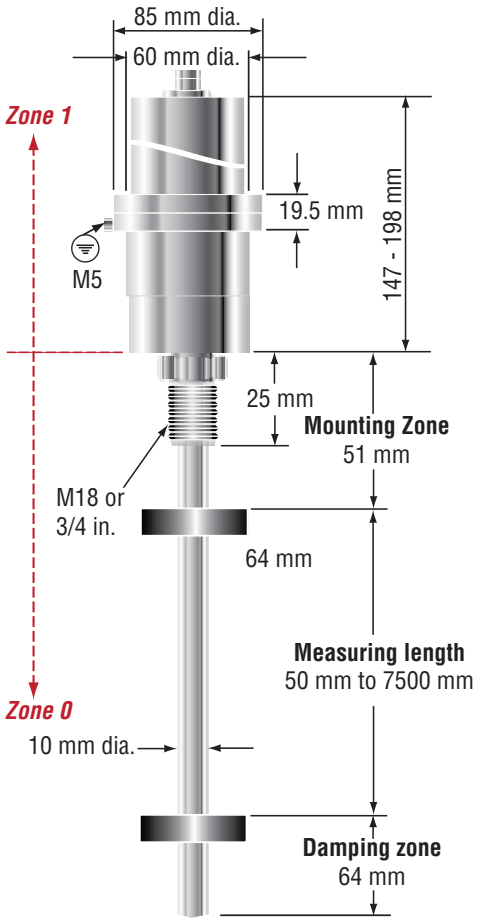

Figure 1. HPH Sensor and housing dimension references

DIMENSIONS, TOP MOUNTED CABLE GLAND

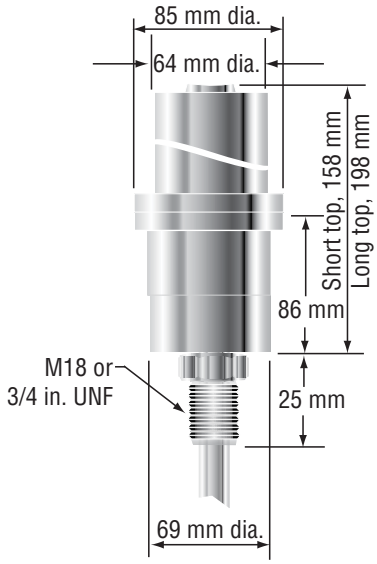

Figure 2. Top mounted cable gland

DIMENSIONS, SIDE MOUNTED CABLE GLAND

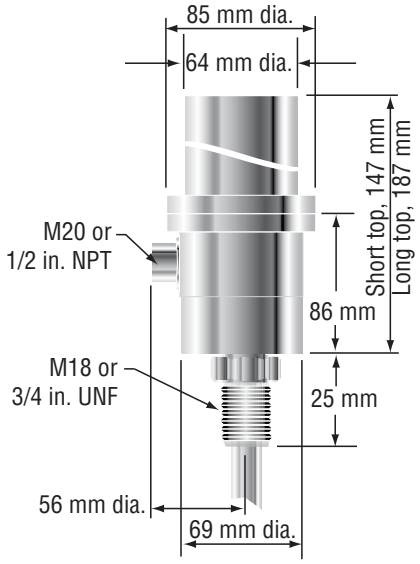

Figure 3. Side mounted cable gland

Design Combination chart

HIGH PRESSURE HOUSING DESIGN COMBINATION SELECTION CHART

Notes:

1. ATEX approved models are manufactured in Denmark.
2. UL and cUL approved models are assembled in USA.
3. Contact factory for custom combinations.

Choose your high pressure housing from the *'HPH Design Combination Chart'* below in *'Table 1'*. HPH accessory options are described in *'Table 2'*.

TYPE	STANDARD		SPECIAL ORDER IN QUANTITIES	STANDARD	SPECIAL ORDER IN QUANTITIES	
BOTTOM / TOP	M18	3/4" UNF	M20 M18	1/2" NPT 3/4" UNF	M20 M20 M18	NPT 1/2" NPT 3/4" UNF
APPROVAL	ATEX ONLY		ATEX ONLY	UL AND cUL	ATEX ONLY	UL AND cUL
M20	0100	0600				
			0900	1000	1300	1400
M20	0300	0800				
					2100	2200

Table 1. HPH Design Combination Chart

High Pressure Housing Accessories

HPH ROTATION ADAPTER

The Rotation adapter accessory (see 'Figure 4') allows you to adjust the position of the side opening when the HPH is mounted in a cylinder. Part No. 253961 is for use with the 3/4" UNF housing thread and has a 1 1/16 in. - #12 SAE Boss O-ring mounting thread.

Figure 4. Rotation adapter (Part no. 253961)

Item	Description	Summit item number
M20 x 1.5 Cable gland	ATEX, 4-8.5 mm cable diameter, stainless steel	CG-816679
M20 x 1.5 Cable gland	ATEX, 8.5-16 mm cable diameter, stainless steel	CG-816609
Nut for flange	316 L Stainless steel	M18 x 1.5
Spanner tool	(2 required)	HPHX-Series 100
Connector, straight exit	Female, 6-pin DIN, straight exit with 10 m cable	HPH6DIN/10MKFPUR25
HPH Rotation Adapter	Use with M18, and M30 x 1.5	RTA-M18
HPH Rotation Adapter	Use with the 3/4 in. UNF housing thread and has a 1 1/16 in. - #12 SAE Boss O-ring mounting thread	253961

Table 2. HPH accessory options

Ordering Information

USE THE FORM BELOW TO ORDER A HIGH PRESSURE HOUSING

(Accessories described in 'Table 2' are ordered separately)

Refer to the example below when placing your order. Approved short housing with M18 mounting threads and one side mounted cable gland with M20 threads and a measuring length of 650 mm:
Example:
HPH-0900-0650-A

H	P	H										
1	2	3	4	5	6	7	8	9	10	11	12

CHOOSE A DESIGN COMBINATION FROM THE DESIGN COMBINATION CHART (4-7) _____ = ☐☐☐☐ **4 - 7**

Refer to '*Table 1. HPH Design Combination Chart*'.

ENTER MEASURING LENGTH (8-11) _____ = ☐☐☐☐ **8 - 11**

Refer to '*Figure 1. HPH Sensor and housing dimension references*'.
Order in millimeters using 5 millimeter increments

ENTER VERSION (12) _____ = ☐ **12**

A = Approved version
N = Non approved version

MTS SENSORS

Document Part number:
551075 Revision F (EN) 09/2014

LOCATIONS

USA
MTS Systems Corporation
Sensors Division
3001 Sheldon Drive
Cary, N.C. 27513, USA
Tel. +1 919 677-0100
Fax +1 919 677-0200
info.us@mtssensors.com
www.mtssensors.com

GERMANY
MTS Sensor Technologie
GmbH & Co. KG
Auf dem Schüffel 9
58513 Lüdenscheid, Germany
Tel. +49 2351 9587-0
Fax +49 2351 56491
info.de@mtssensors.com
www.mtssensors.com

JAPAN
MTS Sensors Technology Corp.
737 Aihara-machi,
Machida-shi,
Tokyo 194-0211, Japan
Tel. +81 42 775-3838
Fax +81 42 775-5512
info.jp@mtssensors.com
www.mtssensors.com

FRANCE
MTS Systems SAS
Zone EUROPARC Bâtiment EXA 16
16/18, rue Eugène Dupuis
94046 Creteil, France
Tel. +33 1 58 4390-28
Fax +33 1 58 4390-03
info.fr@mtssensors.com
www.mtssensors.com

ITALY
MTS Systems Srl.Sensor Division
Via Diaz,4
25050 Provaglio d'Iseo (BS), Italy
Tel. +39 030 988 3819
Fax +39 030 982 3359
info.it@mtssensors.com
www.mtssensors.com

CHINA
MTS Sensors
Room 504, Huajing Commercial Center,
No. 188, North Qinzhou Road
200233 Shanghai, China
Tel. +86 21 6485 5800
Fax +86 21 6495 6329
info.cn@mtssensors.com
www.mtssensors.com

LEGAL NOTICES

MTS, Temposonics and Level Plus are registered trademarks of MTS Systems Corporation. All other trademarks are the property of their respective owners. Printed in USA. Copyright © 2014 MTS Systems Corporation. All Rights Reserved in all media.

All specifications are subject to change. Contact MTS for specifications and engineering drawings that are critical to your application. Drawings contained in this document are for reference only. Go to http://www.mtssensors.com for the latest product information.

ISO 9001 CERTIFIED

CE

APPENDIX- C:

”FABRICATION, INSTALLATION AND COMMISSIONING OF TEST FACILITY FOR BRIDGE EXPANSION JOINTS AT CSIR - CRRI, NEW DELHI:

PACKAGE-3:

INSTRUMENTATION AND CONTROL SYSTEM FOR THREE TEST RIGS OF BRIDGE EXPANSION JOINT TESTING FACILITY”

Data Sheet

U10M

Force transducers

Special features

- **Tensile/compressive force transducer**
- **For dynamic and static applications**
- **High endurance at high vibration bandwidths**
- **Electronic bending moment adjustment**
- **Double bridge version option**
- **Rust-resistant materials**
- **Flange screw fittings corrosion-protected**

Mounting dimensions of the connection variants in mm [inch]

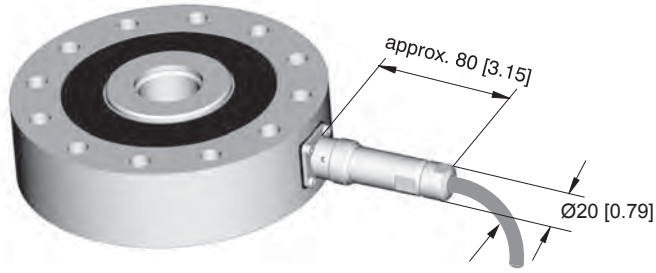

R_{min} = 30 [1.18]

Connection cable **KAB 157-3** with **bayonet locking**, compatible with an MIL-C-26482 series 1 connection

With fixed cable

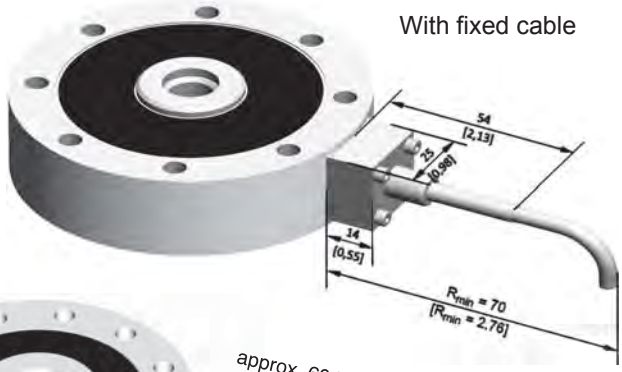

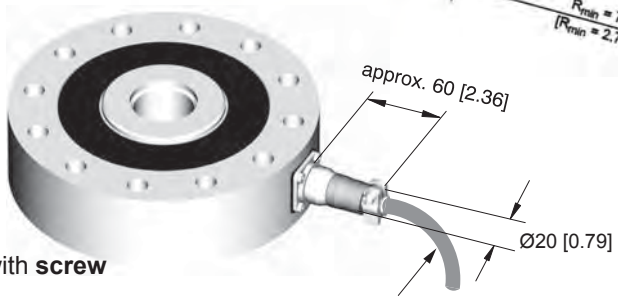

Connection cable **KAB 158-3** with **screw locking**, compatible with an MIL-C-26482 series 1 connection

R_{min} = 30 [1.18]

U10M dimensions with foot adapter

Dimensions in mm; 1 mm = 0.03937 inch

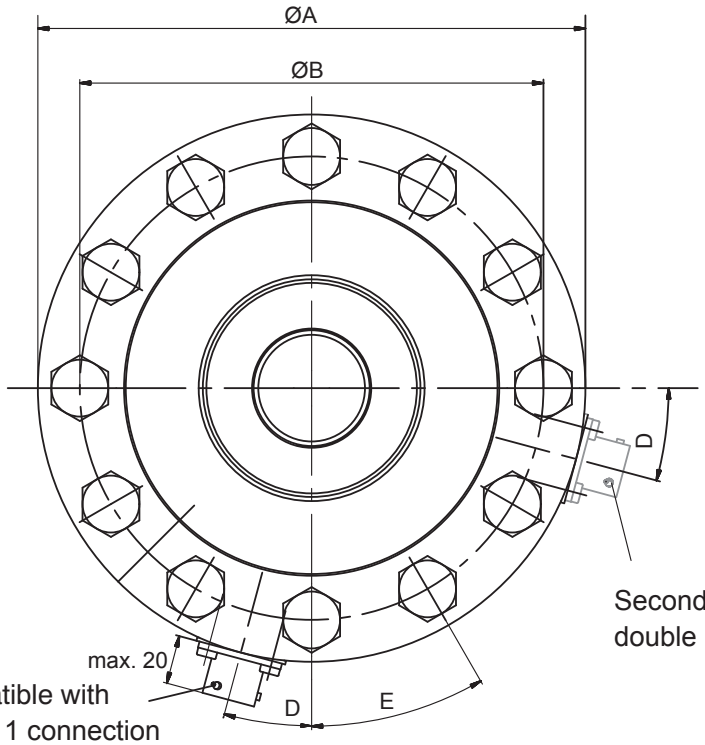

Bayonet: plug-compatible with MIL-C-26482 series 1 connection

Option:
Thread: plug-compatible with MIL-C-26482 series 1 connection

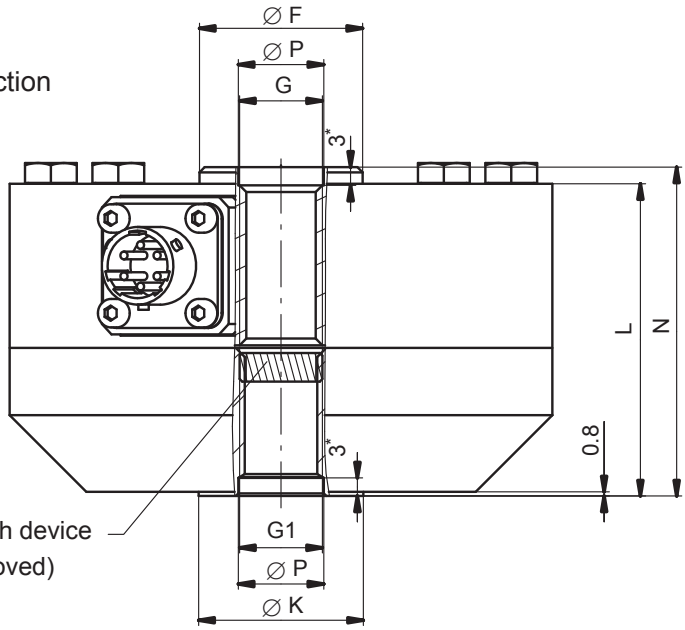

*) Maximum centering depth

Nominal (rated) force	Dimensions in	ØA	ØB	D	E	ØF	G
1.25 kN - 5 kN	mm	104.8	88.9	22.5°	45°	30.4	M16x2-4H 28.4 mm deep
	inch	4.13	3.5			1.2	
12.5 kN - 25 kN	mm	104.8	88.9	22.5°	45°	31.5	M16x2-4H 28.4 mm deep
	inch	4.13	3.5			1.24	
50 kN	mm	153.9	130.3	15°	30°	61.2	M33x2-4H 35.6 mm deep
	inch	6.06	5.13			2.41	
125 kN	mm	153.9	130.3	15°	30°	67.3	M33x2-4H 35.6 mm deep
	inch	6.06	5.13			2.65	

Nominal (rated) force	Dimensions in	ØA	ØB	D	E	ØF	G
250 kN	mm	203.2	165.1	11.25°	22.5°	95.5	M42x2-4H 54.6 mm deep
	inch	8.00	6.51			3.76	
500 kN	mm	279	229	11.25°	22.5°	122.2	M42x2-4H 82.6 mm deep
	inch	10.98	9.02			4.81	

Nominal (rated) force	Dimensions in	G1	ØK	L	N	$ØP_{H8}$
1.25 kN - 25 kN	mm	M16x2-4H 22.1 mm deep	31.8	60.3	63.5	16.5
	inch		1.25	2.37	2.5	0.65
50 kN - 125 kN	mm	M33x2-4H 35.6 mm deep	57.2	85.9	89	33.5
	inch		2.25	3.38	3.5	1.32
250 kN	mm	M42x2-4H 54.6 mm deep	76.2	108	114.3	43
	inch		3	4.25	4.5	1.69
500 kN	mm	M42x2-4H 82.6 mm deep	114	152.4	165.1	73
	inch		4.49	6	6.5	2.87

U10M dimensions without foot adapter

Dimensions in mm; 1 mm = 0.03937 inch

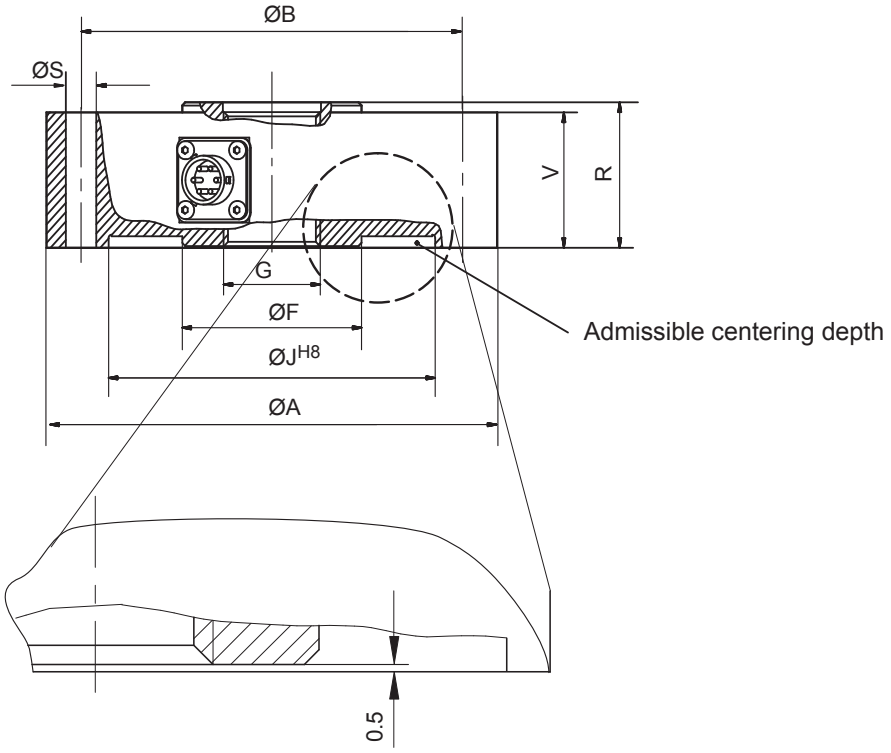

Nominal (rated) force	Dimensions in	ØA	ØB	ØS	ØF	G	$ØJ^{H8}$	V	R	N
1.25 kN - 5 kN	mm	104.8	88.9	6.8	30.4	M16x2-4H	78	31.7	34.9	2.5
	inch	4.13	3.5	0.27	1.2		3.07	1.25	1.37	0.1
5 kN - 25 kN	mm	104.8	88.9	6.8	31.5	M16x2-4H	78	31.7	34.9	2.5
	inch	4.13	3.5	0.27	1.24		3.07	1.25	1.37	0.1
50	mm	153.9	130.3	10.4	61.2	M33x2-4H	111.5	41.4	44.5	2.5
	inch	6.06	5.13	0.41	2.41		4.39	1.63	1.75	0.1
125	mm	153.9	130.3	10.4	67.3	M33x2-4H	111.5	41.4	44.5	2.5
	inch	6.06	5.13	0.41	2.65		4.39	1.63	1.75	0.1
250	mm	203.2	165.1	13.5	95.5	M42x2-4H	143	57.2	63.5	3.5
	inch	8.00	6.51	0.53	3.76		5.63	2.25	2.5	0.14
500	mm	279	229	16.8	122.2	M72x2-4H	175	76.2	88.9	6
	inch	10.98	9.02	0.66	4.81		6.89	3	3.5	0.24

U10M dimensions with force application and foot adapter

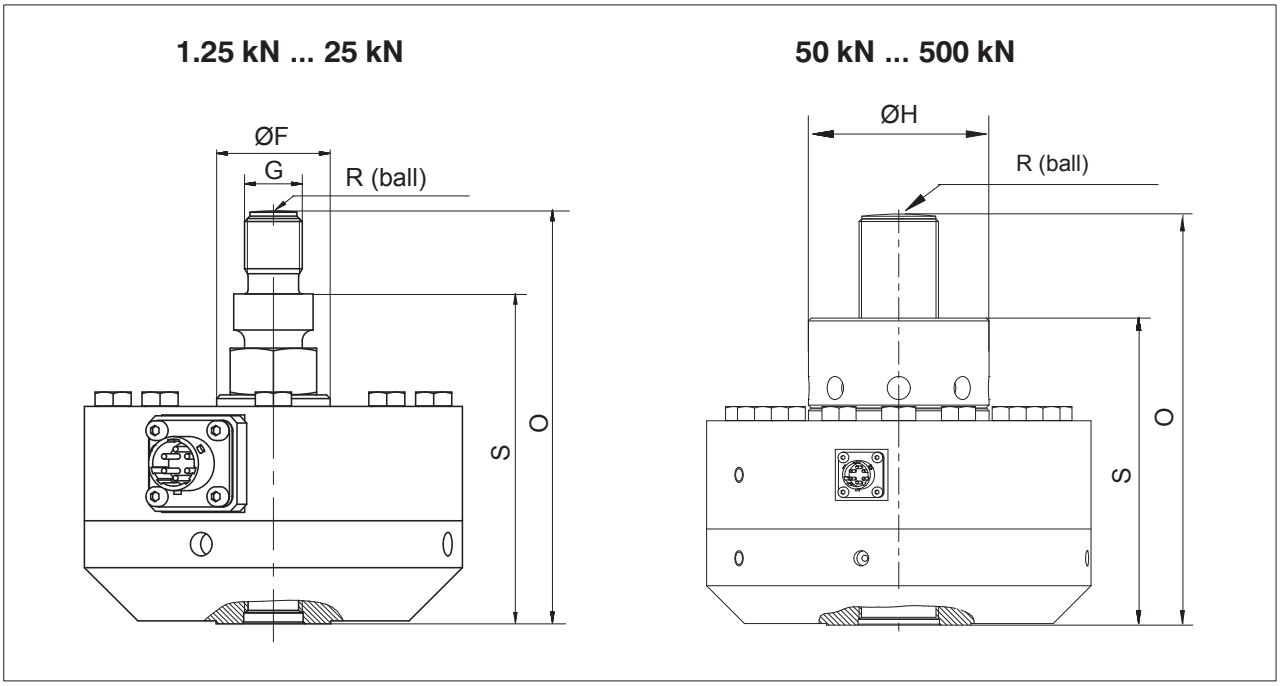

Nominal (rated) force	Dimensions in	ØF	G	ØH	S	O	R
1.25 kN - 5 kN	mm	30.4	M16x2-4H	-	91.5	114.5	60
	inch	1.2			3.6	4.51	2.36
5 kN - 25 kN	mm	31.5	M16x2-4H	-	91.5	114.5	60
	inch	1.24			3.6	4.51	2.36
50	mm	61.2	M33x2-4H	67.3	131.5	174.5	160
	inch	2.41		2.65	5.18	6.87	6.3
125	mm	67.3	M33x2-4H	67.3	131.5	174.5	160
	inch	2.65		2.65	5.18	6.87	6.3
250	mm	95.5	M42x2-4H	95.5	162.3	217.3	160
	inch	3.76		3.76	6.39	8.56	6.3
500	mm	122.2	M72x2-4H	135	230.1	307.3	400
	inch	4.81		5.31	9.06	12.1	15.75

U10M dimensions with knuckle eyes

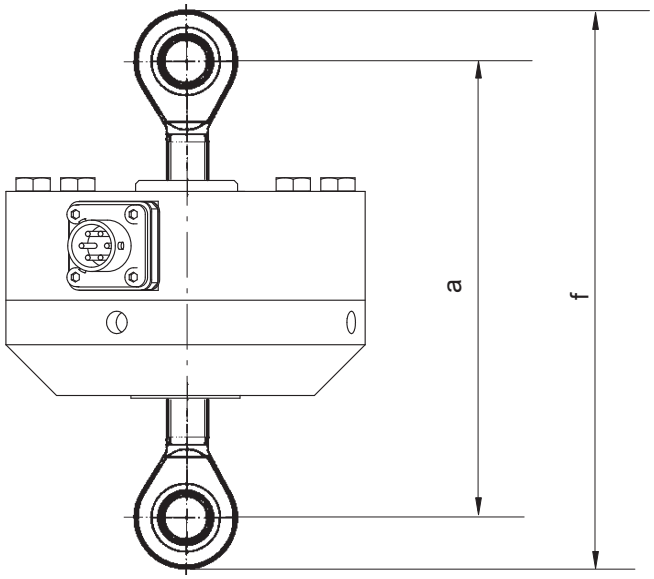

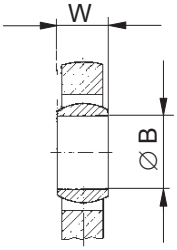

Detailed data on the knuckle eyes, see Page 9

Nominal (rated) force	Order number for knuckle eye	a (approx.)		f (approx.)		W		∅ B	
		mm	inch	mm	inch	mm	inch	mm	inch
1.25 kN - 25 kN	1-Z4/20kN/ZGUW	146	5.748	167	6.575	21	0.827	16	0.630
50 kN - 125 kN	1-ZGAM33F	258	10.157	322	12.577	35	1.387	50	1.969
250 kN	1-ZGAM42F	277	10.906	345	13.583	44	1.732	60	2.362
500 kN	1-ZGAM72F	360	14.173	462	18.189	60	2.362	90	3.543

Pin and cable assignment

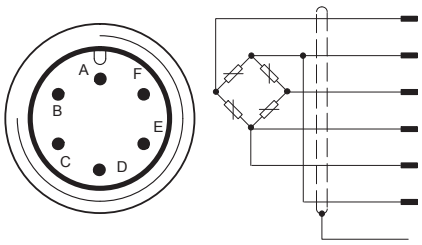

Device plug PIN assignment		Cable assignment
B	Measurement signal (+)	wh (white)
D	Excitation voltage (-) (TEDS *)	bk (black)
C	Measurement signal (-)	rd (red)
A	Excitation voltage (+)	bu (blue)
F	Sense lead (+)	gn (green)
E	Sense lead (-) (TEDS *)	gy (gray)
	Cable shield, connected to the housing	Shielding

* Only with selected option T (transducer identification)

Accessories (to be ordered separately):

Cables/plugs	Order number
Connection cable KAB157-3; IP67 (with bayonet locking); 3 m long, TPE outer sheath; 6 x 0.25 mm^2; free ends, shielded, outside diameter 6.5 mm	1-KAB157-3
Connection cable KAB158-3; IP54 (with screw locking); 3 m long, TPE outer sheath; 6 x 0.25 mm^2; free ends, shielded, outside diameter 6.5 mm	1-KAB158-3
Loose connecting socket (bayonet locking)	3-3312.0382
Loose connecting socket (screw locking)	3-3312.0354
Ground cable (400 mm long)	1-EEK4
Ground cable (600 mm long)	1-EEK6
Ground cable (800 mm long)	1-EEK8
Knuckle eye, M16 external thread	1-Z4/20kN/ZGUW
Knuckle eye, M33x2 external thread	1-ZGAM33F
Knuckle eye, M42x2 external thread	1-ZGAM42F
Knuckle eye, M72x2 external thread	1-ZGAM72F
Knuckle eye, M16 internal thread	1-Z4/20kN/ZGOW
Knuckle eye, M33x2 internal thread	1-ZGIM33F
Knuckle eye, M42x2 internal thread	1-ZGIM42F
Knuckle eye, M72x2 internal thread	1-ZGIM72F

Specifications (VDI/VDE 2638)

Nominal (rated) force	F_{nom}	kN	**1.25**	**2.5**	**5**	**12.5**	**25**	**50**	**125**	**250**	**500**
Nominal (rated) sensitivity	C_{nom}	mV/V	1 … 1.5 [1]			2 … 2.5 [1]					
Accuracy class			0.03			0.04			0.05		0.06
Relative repeatability error in an unmodified mounting position	b_{rg}	%	0.025								
Relative zero signal error	$d_{s,0}$	%	1								
Relative reversibility error [2] (at $0.4 \cdot F_{nom}$)	$v_{0.4}$	%vl %vc	< 0.075 0.03			< 0.1 0.04		< 0.125 0.05			< 0.125 0.05
Relative linearity error	d_{lin}	%	< ± 0.03			< ± 0.04					< ± 0.06
Relative creep over 30min	d_{crf+E}	%	< ± 0.04			< ± 0.025					
Effect of temperature on sensitivity/10K	TK_C	%	< ± 0.015								
Temperature effect on the zero signal/10K	TK_0	%	< ± 0.015								
Bending moment influence (at $10\% \cdot F_{nom} \cdot 10$ mm)	d_Q	%	< 0.01								
Output resistance	R_o	Ω	280 … 360								
Input resistance	R_i	Ω	> 345								
Insulation resistance	R_{is}	GΩ	> 2								
Reference excitation voltage	U_{ref}	V	5								
Operating range of excitation voltage	$B_{U,G}$	V	0.5 to 12								
Reference temperature	T_{ref}	°C [°F]	+23 [73.4]								
Nominal (rated) temperature range	$B_{T,nom}$	°C [°F]	-10 … +45 [+14 … +113]								
Operating temperature range	$B_{T,G}$	°C [°F]	-30 … +85 [-22 … +185]								
Storage temperature range	$B_{T,S}$	°C [°F]	-30 … +85 [-22 … +185]								
Max. operating force	(F_G)	% v. F_{nom}	240								
Breaking force	(F_B)	% v. F_{nom}	> 400								
Static lateral limit force [3]	(F_Q)	% v. F_{nom}	100								
Bending limit moment	$M_{b\ perm}$	N · m	30	60	125	315	635	1270	3175	5715	11430
Limit torque	M_L	N · m	30	60	125	315	635 [4]	1270	3175	5715	11430
Nominal (rated) displacement	s_{nom}	mm	0.02			0.03			0.04	0.05	0.06
Fundamental resonance frequency	f_G	kHz	4.5	5.9	9.3	6.6	9.2	6.5	8.1	6.6	6.1
Rigidity	F/S	10^5 N/mm	0.625	1.25	2.5	4.17	8.33	16.7	31.3	50.0	83.3
Permissible vibrational stress (Vibration bandwidth per DIN 50100)	F_{rb}	% v. F_{nom}	200								
Weight (without cable) With adapter Without adapter		kg lbs kg lbs	1.2 2.65 0.5 1.1			3 6.61 1.3 2.87		10 22.05 5 11.02		23 50.71 11 24.25	60 132.28 28 61.73
Immunity from interference (EN 61326-1, Table A.1)			Industrial environment								
Electromagnetic field (AM)		V/m	10								
Magnetic field		A/m	30								
Electrostatic discharge (ESD)											
Contact discharge		kV	4								
Air discharge		kV	8								
Burst (rapid transients)		kV	1								
Surge (impulse voltages)		kV	1								
Grid-bound interferences (AM)		V	3								

Nominal (rated) force	F_{nom}	kN	1.25	2.5	5	12.5	25	50	125	250	500
Mechanical shock (Test severity level IEC 68-2-29-1987) Number Duration Acceleration		 n ms m/s²	1000 3 1000								
Vibrational stress (Test severity level per DIN IEC 68; Part 2-6; IEC68-2-6-1982) Frequency range Duration Acceleration		 Hz min m/s²	5 … 65 30 150								
Degree of protection per DIN EN 60529			IP64 / IP67 / IP68 5)								

1) Option: Adjustment of sensitivity to 2 mV/V (or 1 mV/V).
2) Reversibility error at 200% is typically the same as at nominal (rated) force.
3) Pure lateral force relating to the link centre of the transducer.
4) For transducer with adapter: 370 N · m.
5) IP67 for version with bayonet locking (and inserted plug) and for versions with fixed cable and nominal (rated) force ≦5 kN. The versions with fixed cable and nominal (rated) force ≧12.5 kN are IP68, all other versions are IP64.

Versions and order numbers U10M

Code	Measuring range	Order number
1k25	1.25 kN	1-U10M/1.25 kN
2k50	2.5 kN	1-U10M/2.5 kN
5k00	5 kN	1-U10M/5 kN
12k5	12.5 kN	1-U10M/12.5 kN
25k0	25 kN	1-U10M/25 kN
50k0	50 kN	1-U10M/50 kN
125k	125 kN	1-U10M/125 kN
250k	250 kN	1-U10M/250 kN
500k	500 kN	1-U10M/500 kN

Preferred version, available at short notice

The order number for the preferred types is 1-U10M …, the order number for customer-specific versions is K-U10M …

Number of measuring bridges	Characteristic value	Calibration	Transducer identification	Mechanical design	Plug protection	El. connection Bridge A	El. connection Bridge B	Force application
Single bridge **SB**	Not adjusted **N**	100 % (dyn.) **1**	Without TEDS **S**	With adapter **W**	Without **U**	Bayonet connector **B**	Bayonet connector **B**	Without **O**
Double bridge **DB**	Adjusted **J**	200 % (stat.) **2**	With TEDS **T**	Without adapter **N**	With **P**	Threaded connector **G**	Threaded connector **G**	With **L**
						Fixed cable (6 m) **K**	Fixed cable (6 m) **K**	

K-U10M-	12k5	DB	J	2	T	W	P	B	G	O

Number of measuring bridges	For reasons of redundancy, in devices relevant to safety it is necessary to check the plausibility of the measurement signal with a second measuring bridge (installed on the same measuring element). The signals are independently conditioned and evaluated using two separate measuring amplifiers.
Characteristic value	The exact nominal (rated) sensitivity is specified on the identification plate. The transducer can also be adjusted to a whole number sensitivity of 1.0m V/V or 2.0m V/V (if 200% calibration selected: 2 mV/V or 4 mV/V). The rel. sensitivity error (compression) is then 0,1% of the nominal (rated) sensitivity. The sensitivity range of a unadjusted transducer lies between 1 and 1.5 or 2 and 2.5mV/V.
Calibration	In the standard version, the transducer is designed for dynamic application up to a vibration bandwidth of ±100% F_{nom}. For quasistatic applications, the transducer can be used up to 200% F_{nom}. The option is available to calibrate accordingly to 200% F_{nom}.

Transducer identification	TEDS integration (integrated electronic data sheet) in accordance with IEEE1451.4
Mechanical design	The sensitivity is determined at the factory with the bolted-on adapter. The bolted-on adapter ensures the best-possible screw-fastening conditions and allows the transmission of axial force through a central internal thread. If the adapter is not used, a sensitivity deviation of $<1\%$ must be taken into account.
Plug protection	Mechanical protection through the installation of an additional square profile around the connector. Dimensions in mm approx.: WxHxB: 30x30x20
Electrical connection Bridge A	The standard version is the male device connector with bayonet locking (PT02E10–6P-compatible). The option is also available to install a screw-fitting male device connector (PC02E10–6P-compatible). A third variant where the force transducers are fitted with a fixed cable is also available. In this version, all U10 achieve degree of protection IP68 with a nominal (rated) force equal to or greater than 12.5 kN.
Electrical connection Bridge B	The standard version is the male device connector with bayonet locking (PT02E10–6P-compatible). The option is also available to install a screw-fitting male device connector (PC02E10–6P-compatible). Both these connection variants are often used for differentiation in the double-bridge version. A third variant where the force transducers are fitted with a fixed cable is also available. In this version, all U10 achieve degree of protection IP68 with a nominal (rated) force equal to or greater than 12.5 kN.
Force application	Mounted force application. Standard is without force application, if requested, we can mount a force application bolt. Dimensions, see Page 4.

Accessories - Knuckle eyes

ZGUW / ZGAM

Dimensions in mm; 1 mm = 0.03937 inch

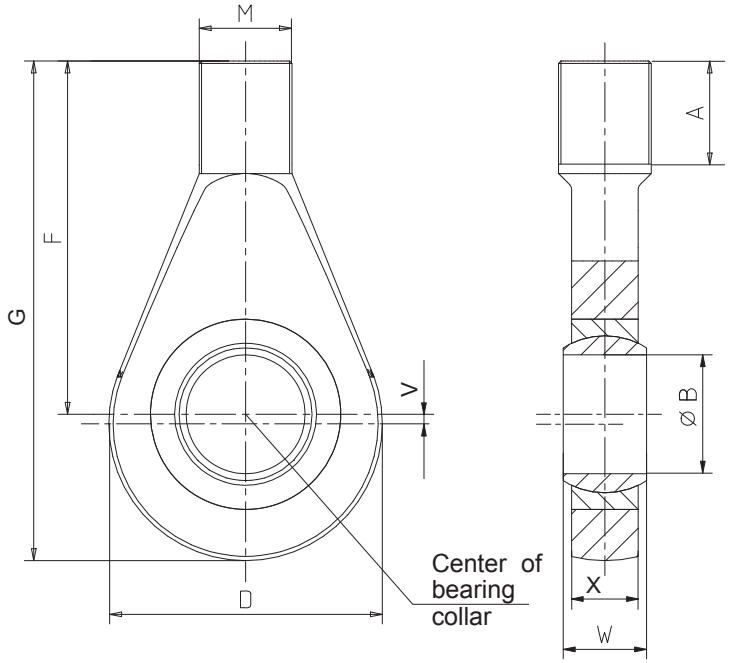

Nominal (rated) force	Order no. Knuckle eye	A	∅ B	D	F	G	M	V	W	X	Weight
1.25 kN - 25 kN	1-Z4/20kN/ZGUW	41.7	$16^{+0.018}$	42	67.7	88.7	M16	0	21	15	0.2 kg
50 kN - 125 kN	1-ZGAM33F	35	$50^{-0.012}$	115	118	182.5	M33x2	7	35	28	2.5 kg
250 kN	1-ZGAM42F	45	$60^{-0.015}$	126	134	202	M42x2	5	44	36	3.8 kg
500 kN	1-ZGAM72F	45	$90^{-0.02}$	190	178	280	M72x2	7	60	50	12.6 kg

Knuckle eyes are only suitable for static tensile loads.

Modifications reserved.
All product descriptions are for general information only. They are not to be understood as a guarantee of quality or durability and do not constitute any liability whatsoever.

Hottinger Baldwin Messtechnik GmbH

Im Tiefen See 45 · 64293 Darmstadt · Germany
Tel. +49 6151 803-0 · Fax: +49 6151 803-9100
Email: info@hbm.com · www.hbm.com

measure and predict with confidence

B1444-2.5 en

APPENDIX- D:

”FABRICATION, INSTALLATION AND COMMISSIONING OF TEST FACILITY FOR BRIDGE EXPANSION JOINTS AT CSIR - CRRI, NEW DELHI:

PACKAGE-3:

INSTRUMENTATION AND CONTROL SYSTEM FOR THREE TEST RIGS OF BRIDGE EXPANSION JOINT TESTING FACILITY”

APPENDIX– D

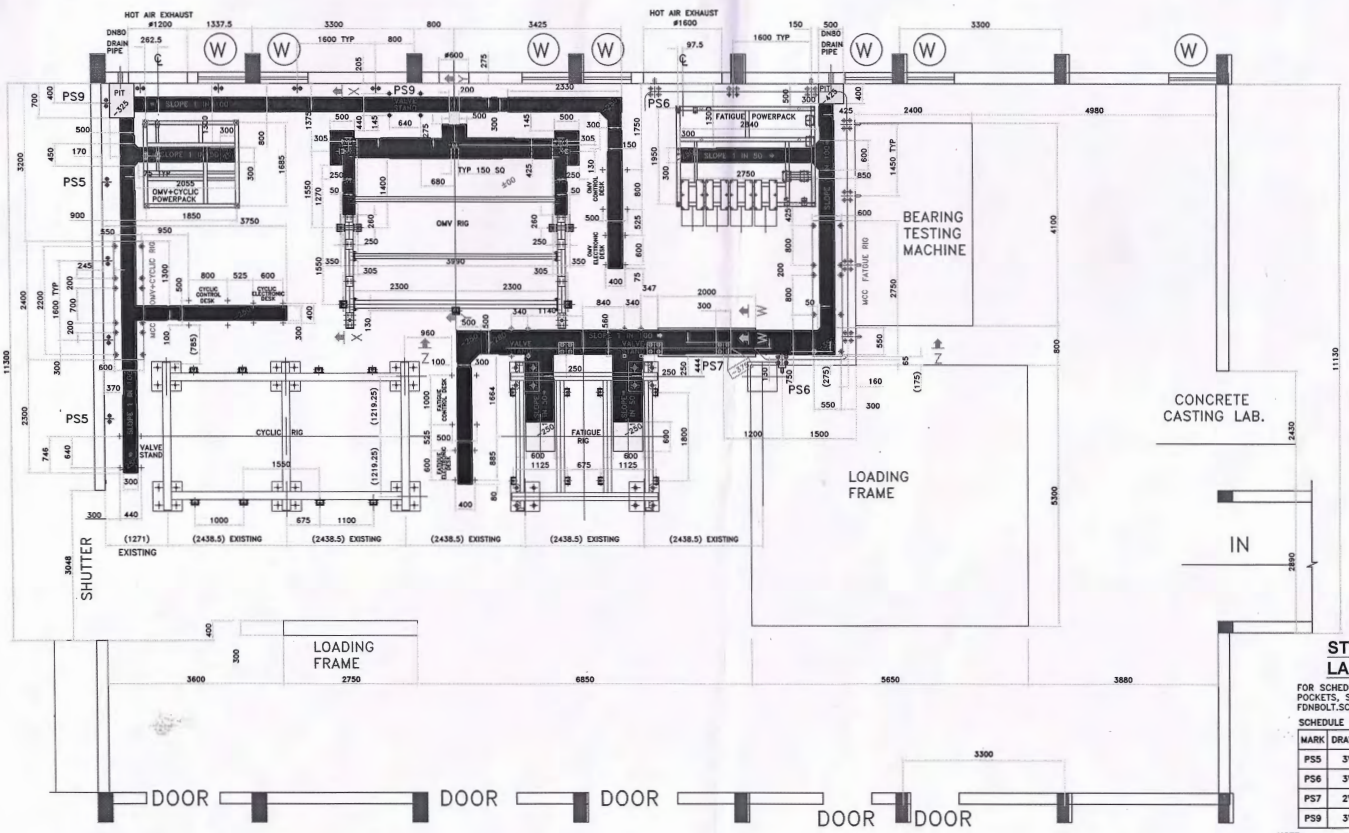

STRUCTURAL TESTING LABORATORY (BAS)

FOR SCHEDULE OF FOUNDATION BOLTS & POCKETS, SEE FILENAME: FDNBOLT.SCHEDULE.03.XLS

SCHEDULE OF PIPE SUPPORTS

MARK	DRAWING NO.	QTY	REMARKS
PS5	3V70295	4	CYCLIC RIG ON FLOOR
PS6	3V70296	8	FATIGUE RIG ON FLOOR
PS7	2V70297	3	FATIGUE RIG IN TRENCH
PS9	3V70299	5	OMV RIG ON FLOOR

NOTE:
1. HOT AIR EXHAUST PORTHOLE CENTERS SHALL BE AT +3175 FOR OMV+CYCLIC RIG AND AT +3150 FOR FATIGUE RIG, FROM 0 LEVEL
2. ALL EXISTING REFERENCE DIMENSIONS SHALL BE CHECKED BY MEASUREMENT
3. ALL EXISTING FOUNDATION BOLTS 1-1/2" BSW MAY BE REPLACED BY M36 BOLTS, IF NECESSARY.
4. BOTH SUBFRAMES SHALL BE MADE FROM INTERMITTENT WELD TWIN CHANNEL MC250 BOX SECTION WITH 160 WIDTH, AS PER DRAWINGS
5. BOTH POWERPACKS SHALL BE GROUTED WITH 50 mm GROUTING ALLOWANCE

SECTION: X–X

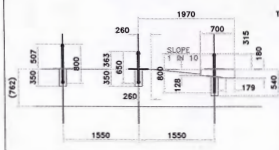

SECTION: Y–Y

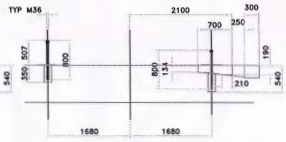

SECTION: Z–Z

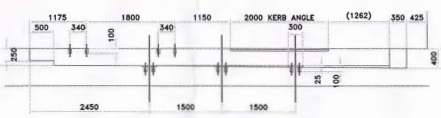

SECTION: W–W

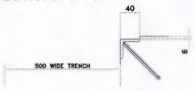

NO.	DESCRIPTION	QTY	NOM SIZE	FIN WT	MAT	ST SIZE	ST WT	DRG/SPEC NO	REMARKS
HEAT TREATMENT			SCALE1:40	THIRD ANGLE PROJECTION	DRAWN	ADG	28.06.21		ANCHOR BOLT PLAN & TRENCH LAYOUT TEST HALL
PROTECTIVE COATING			HYDRAULIC TEST RIGS FOR MODULAR BRIDGE EXPANSION JOINTS		CHECKED	ADG	28.06.21		
EQUIPT					APPRVD			DRG NO	1V70105B
ASSY NO			CSIR–CRRI NEW DELHI		FILENAME:\CRRI\LAYOUT08			SHT 1OF1	